SDM439 GPIO Configuration For QRD439+PMI632

GPIO_0	NFC_SPI_ESE_MOSI	GPIO_41		GPIO_82	FM_DATA
GPIO_1	NFC_SPI_ESE_MISO	GPIO_42	ACCL_INT1	GPIO_83	BT_CTL
GPIO_2	NFC_SPI_CS_N_0	GPIO_43	ALSP_INT_N	GPIO_84	BT_DATA
GPIO_3	NFC_SPI_ESE_CLK	GPIO_44	MAG_DRDY_INT	GPIO_85	FP_SPI_MOSI
GPIO_4	QUP_UART_TX_2	GPIO_45	GYRO_INT	GPIO_86	FP_SPI_MISO
GPIO_5	QUP_UART_RX_2	GPIO_46		GPIO_87	FP_SPI_CS
GPIO_6	WSA_SMB_I2C_SDA	GPIO_47	SENSOR_SPI_CS2_N	GPIO_88	FP_SPI_CLK
GPIO_7	WSA_SMB_I2C_SCL	GPIO_48	FP_INT_N1	GPIO_89	
GPIO_8	TP_SPI_MOSI	GPIO_49	UIM_BATT_ALARM	GPIO_90	
GPIO_9	TP_SPI_MISO	GPIO_50		GPIO_91	KEY_VOL_UP_N
GPIO_10	TP_SPI_CS_SDA	GPIO_51	UIM1_DATA	GPIO_92	
GPIO_11	TP_SPI_CLK_SCL	GPIO_52	UIM1_CLK	GPIO_93	NFC_ESE_PWR_REQ
GPIO_12	WSA_INTR	GPIO_53	UIM1_RESET	GPIO_94	WSA_IO_DATA
GPIO_13	LCD_ID	GPIO_54	UIM1_PRESENT	GPIO_95	WSA_IO_CLK
GPIO_14	SENSOR_I2C_SDA	GPIO_55	UIM2_DATA	GPIO_96	WSA_EN
GPIO_15	SENSOR_I2C_SCL	GPIO_56	UIM2_CLK	GPIO_97	HomeKey_FP_INT
GPIO_16	NFC_DISABLE	GPIO_57	UIM2_RESET	GPIO_98	
GPIO_17	NFC_IRQ	GPIO_58	UIM2_PRESENT	GPIO_99	
GPIO_18	NFC_I2C_SDA	GPIO_59		GPIO_100	RFFE1_CLK
GPIO_19	NFC_I2C_SCL	GPIO_60	LCD0_RESET_N	GPIO_101	RFFE1_DATA
GPIO_20	SENSOR_SPI_MOSI	GPIO_61	SMB_INT	GPIO_102	RFFE2_CLK
GPIO_21	SENSOR_SPI_MISO	GPIO_62		GPIO_103	RFFE2_DATA
GPIO_22	SENSOR_SPI_CS0_N	GPIO_63		GPIO_104	
GPIO_23	SENSOR_SPI_CLK	GPIO_64	TP_RST_N	GPIO_105	
GPIO_24	LCD_TE0	GPIO_65	TP_INT_N	GPIO_106	
GPIO_25	WSA_MCLK	GPIO_66		GPIO_107	GRFC3_SEL
GPIO_26	CAM_MCLK0	GPIO_67	SDCARD_DET_N	GPIO_108	
GPIO_27	CAM_MCLK1	GPIO_68		GPIO_109	GRFC5_SEL
GPIO_28		GPIO_69	CDC_PDM_CLK	GPIO_110	GRFC6_SEL
GPIO_29	CAM_I2C_SDA0	GPIO_70	CDC_PDM_SYNC	GPIO_111	GRFC7_SEL
GPIO_30	CAM_I2C_SCL0	GPIO_71	CDC_PDM_TX	GPIO_112	GRFC8_SEL
GPIO_31	CAM_I2C_SDA1	GPIO_72	CDC_PDM_RX0	GPIO_113	GRFC9_SEL
GPIO_32	CAM_I2C_SCL1	GPIO_73	CDC_PDM_RX1	GPIO_114	GRFC10_SEL
GPIO_33		GPIO_74	CDC_PDM_RX2	GPIO_115	
GPIO_34	FLASH_STROBE_NOW	GPIO_75	BT_SSBI	GPIO_116	
GPIO_35	CAM_AVDD_LDO_EN	GPIO_76	WL_CMD_DATA_2	GPIO_117	
GPIO_36	MCAM_RST_N	GPIO_77	WL_CMD_DATA_1	GPIO_118	EXT_GPS_LNA_EN
GPIO_37	FORCE_USB_BOOT	GPIO_78	WL_CMD_DATA_0	GPIO_119	CH0_GSM_TX_PHASE_D0
GPIO_38	SCAM_RST_N	GPIO_79	WL_CMD_SET	GPIO_120	RFFE5_CLK
GPIO_39		GPIO_80	WL_CMD_CLK	GPIO_121	RFFE5_DATA
GPIO_40		GPIO_81	FM_SSBI	GPIO_122	

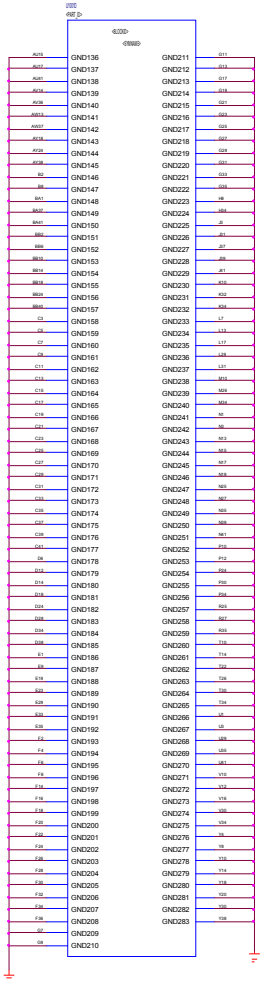
U?????
<NET ?>
<GND>
<GND>
AU10 GND136
AU13 GND137
AU21 GND138
AU24 GND139
AU36 GND140
AW13 GND141
AW27 GND142
AY18 GND143
AY24 GND144
AY28 GND145
B2 GND146
B6 GND147
BA1 GND148
BA37 GND149
BA41 GND150
BB3 GND151
BB6 GND152
BB10 GND153
BB16 GND154
BB18 GND155
BB29 GND156
BB40 GND157
C3 GND158
C5 GND159
C7 GND160
C9 GND161
C11 GND162
C13 GND163
C15 GND164
C17 GND165
C19 GND166
C21 GND167
C23 GND168
C25 GND169
C27 GND170
C29 GND171
C31 GND172
C33 GND173
C35 GND174
C37 GND175
C39 GND176
C41 GND177
D8 GND178
D12 GND179
D14 GND180
D16 GND181
D24 GND182
D28 GND183
D34 GND184
D38 GND185
E1 GND186
E5 GND187
E10 GND188
E23 GND189
E29 GND190
E35 GND191
E39 GND192
F2 GND193
F4 GND194
F6 GND195
F8 GND196
F12 GND197
F18 GND198
F19 GND199
F23 GND200
F25 GND201
F27 GND202
F29 GND203
F31 GND204
F33 GND205
F35 GND206
F37 GND207
F39 GND208
G7 GND209
G9 GND210
GND211 G11
GND212 G13
GND213 G17
GND214 G19
GND215 G21
GND216 G23
GND217 G25
GND218 G27
GND219 G29
GND220 G31
GND221 G33
GND222 G35
GND223 H8
GND224 H24
GND225 J5
GND226 J11
GND227 J17
GND228 J23
GND229 J41
GND230 K10
GND231 K32
GND232 K34
GND233 L7
GND234 L13
GND235 L17
GND236 L29
GND237 L31
GND238 M12
GND239 M28
GND240 M34
GND241 N1
GND242 N5
GND243 N13
GND244 N15
GND245 N17
GND246 N19
GND247 N23
GND248 N27
GND249 N35
GND250 N39
GND251 N41
GND252 P10
GND253 P12
GND254 P24
GND255 P30
GND256 P34
GND257 R23
GND258 R27
GND259 R35
GND260 T12
GND261 T14
GND262 T22
GND263 T26
GND264 T30
GND265 T34
GND266 U7
GND267 U9
GND268 U29
GND269 U35
GND270 U41
GND271 V10
GND272 V12
GND273 V16
GND274 V22
GND275 V24
GND276 V3
GND277 V8
GND278 V12
GND279 V14
GND280 V18
GND281 V20
GND282 V30
GND283 V35

GPIO_123			
GPIO_124	FP_RESET		
GPIO_125			
GPIO_126			
GPIO_127			
GPIO_128			
GPIO_129			
GPIO_130	NFC_DWL_REQ		
GPIO_131			
GPIO_132	RCM_MARKER1		
GPIO_133	RCM_MARKER2		

PMI632 GPIO/MPP Configuration

GPIO_1	CONNECTOR_THERMAL	GPIO_5	FLASH_STROBE_NOW
GPIO_2	SMB_PARALLEL_CHG_EN	GPIO_6	NEBULA_PWM
GPIO_3	SKIN_THEREMAL	GPIO_7	SMB_VCHG_P
GPIO_4	SMB_THEREMAL	GPIO_8	SMB_VCHG_M

PM439 GPIO/MPP Configuration

GPIO_1		MPP_1	VDD_PX_BIAS_MPP_1
GPIO_2	NFC_CLK_REQ		
GPIO_3	UIM_BATT_ALARM	MPP_3	VREF_DAC_MPP_3
GPIO_4	WLED_EN	MPP_4	QUIET_THERM_TP_LED_K
GPIO_5			
GPIO_6			
GPIO_7			
GPIO_8	LCM_BL_PWM		

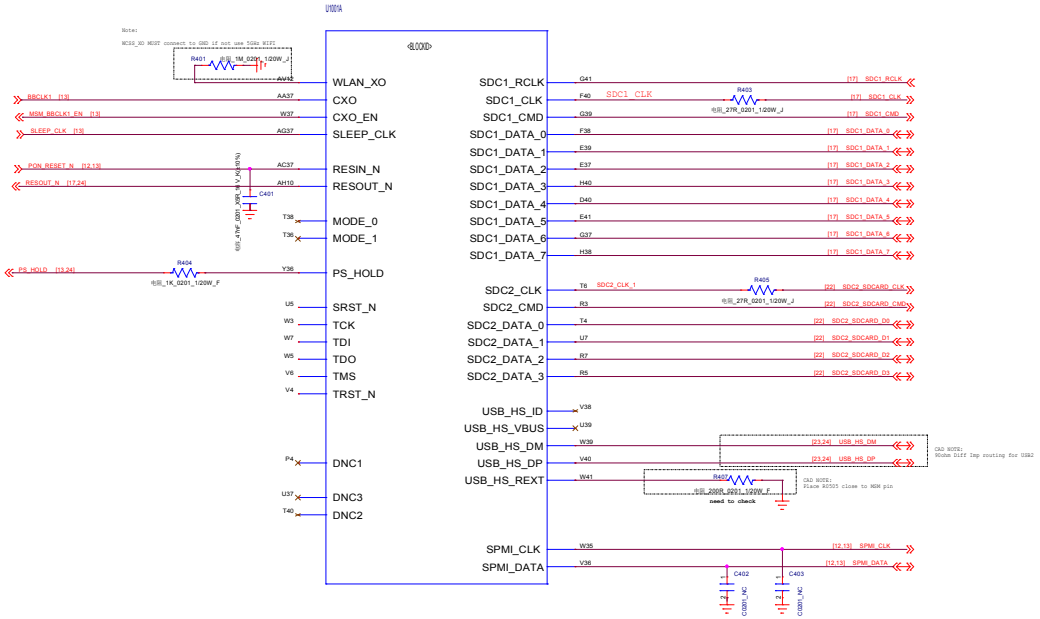
U0604
U0604A
Note:
NCSS_XO MUST connect to GND if not use 5GHz WIFI
R401
电阻_1M_0201_1/20W_J
AV12
WLAN_XO
BBCLK1 [13]
AA37
CXO
MSM_BBCLK1_EN [13]
W37
CXO_EN
SLEEP_CLK [13]
AG37
SLEEP_CLK
PON_RESET_N [12,13]
AC37
RESIN_N
RESOUT_N [17,24]
AH10
RESOUT_N
C401
电容_47nF_0201_X5R_4V_20%(M)
T38
MODE_0
T36
MODE_1
PS_HOLD [13,24]
R404
电阻_1K_0201_1/20W_F
Y36
PS_HOLD
U5
SRST_N
W3
TCK
W7
TDI
W5
TDO
V6
TMS
V4
TRST_N
P4
DNC1
U37
DNC3
T40
DNC2
SDC1_RCLK
G41
[17] SDC1_RCLK
SDC1_CLK
F40
SDC1_CLK
R403
电阻_27R_0201_1/20W_J
[17] SDC1_CLK
SDC1_CMD
G39
[17] SDC1_CMD
SDC1_DATA_0
F38
[17] SDC1_DATA_0
SDC1_DATA_1
E39
[17] SDC1_DATA_1
SDC1_DATA_2
E37
[17] SDC1_DATA_2
SDC1_DATA_3
H40
[17] SDC1_DATA_3
SDC1_DATA_4
D40
[17] SDC1_DATA_4
SDC1_DATA_5
E41
[17] SDC1_DATA_5
SDC1_DATA_6
G37
[17] SDC1_DATA_6
SDC1_DATA_7
H38
[17] SDC1_DATA_7
SDC2_CLK
T6
SDC2_CLK_1
R405
电阻_27R_0201_1/20W_J
[22] SDC2_SDCARD_CLK
SDC2_CMD
R3
[22] SDC2_SDCARD_CMD
SDC2_DATA_0
T4
[22] SDC2_SDCARD_D0
SDC2_DATA_1
U7
[22] SDC2_SDCARD_D1
SDC2_DATA_2
R7
[22] SDC2_SDCARD_D2
SDC2_DATA_3
R5
[22] SDC2_SDCARD_D3
USB_HS_ID
V38
USB_HS_VBUS
U39
USB_HS_DM
W39
[23,24] USB_HS_DM
USB_HS_DP
V40
[23,24] USB_HS_DP
USB_HS_REXT
W41
R407
电阻_200R_0201_1/20W_F
need to check
CAD NOTE:
Place R2555 close to MSM pin
CAD NOTE:
90ohm Diff Imp routing for USB2
SPMI_CLK
W35
[12,13] SPMI_CLK
SPMI_DATA
V36
[12,13] SPMI_DATA
C402
C0201_MC
C403
C0201_MC

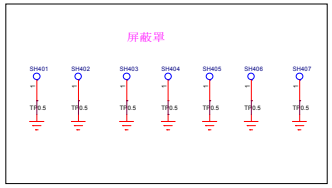
屏蔽罩
SH401
SH402
SH403
SH404
SH405
SH406
SH407
TP0.5
TP0.5
TP0.5
TP0.5
TP0.5
TP0.5
TP0.5

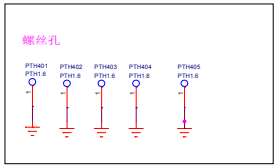
螺丝孔
PTH401
PTH1.8
PTH402
PTH1.8
PTH403
PTH1.8
PTH404
PTH1.8
PTH405
PTH1.8

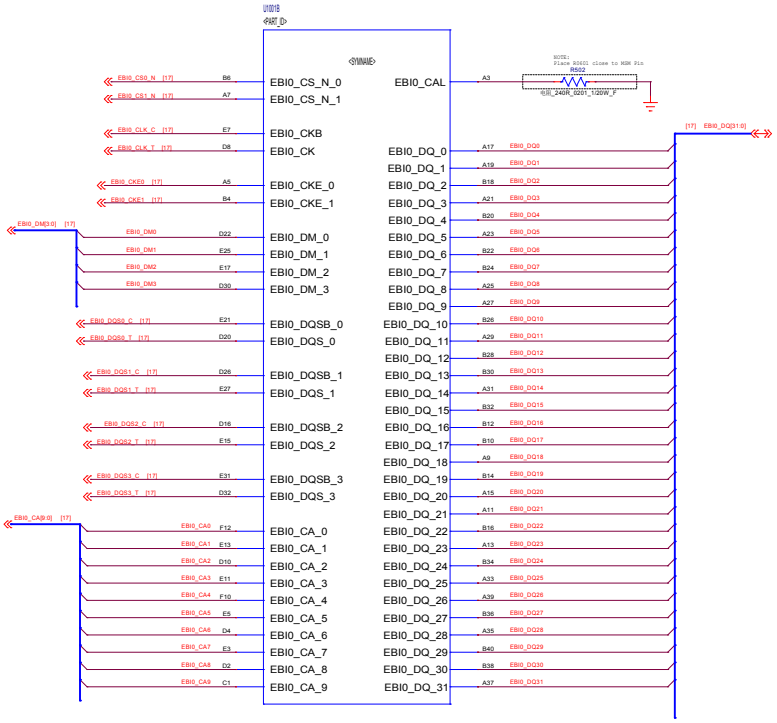

SDM439_EBI

NOT TO BE USED, COPIED, REPRODUCED IN WHOLE OR IN PART, NOR ITS CONTENTS REVEALED IN ANY MANNER TO OTHERS WITHOUT THE EXPRESS WRITTEN PERMISSION OF QUALCOMM.

THIS TECHNICAL DATA MAY BE SUBJECT TO U.S. AND INTERNATIONAL EXPORT, RE-EXPORT OR TRANSFER ("EXPORT") LAWS. DIVERSION CONTRARY TO U.S. AND INTERNATIONAL LAW IS STRICTLY PROHIBITED.

Copyright (C) 2018 QUALCOMM Technologies,Inc.
All rights reserved

QUALCOMM

CONFIDENTIAL AND PROPRIETARY-QUALCOMM TECHNOLOGIES, INC.

QUALCOMM IS A REGISTERED TRADEMARK OF QUALCOMM INCORPORATED IN THE UNITED STATES AND MAY BE REGISTERED IN OTHER COUNTRIES. OTHER PRODUCT AND BRAND NAMES MAY BE TRADEMARKS OR REGISTERED TRADEMARKS OF THEIR RESPECTIVE OWNERS.

QUALCOMM Technologies,Inc.
5775 Morehouse Drive
San Diego, CA 92121-1714
U.S.A.

Title
SCHEMATIC, CCA, MAIN, QRD439_2-4-2, EVT1.0

Size	Sheet Name	Rev
D	LD20-PF623	A

Date: Thursday, June 27, 2019 Sheet 5 of 33

NOTE:
Asterisks (*) indicate modem power management (MPM) wake-up pins

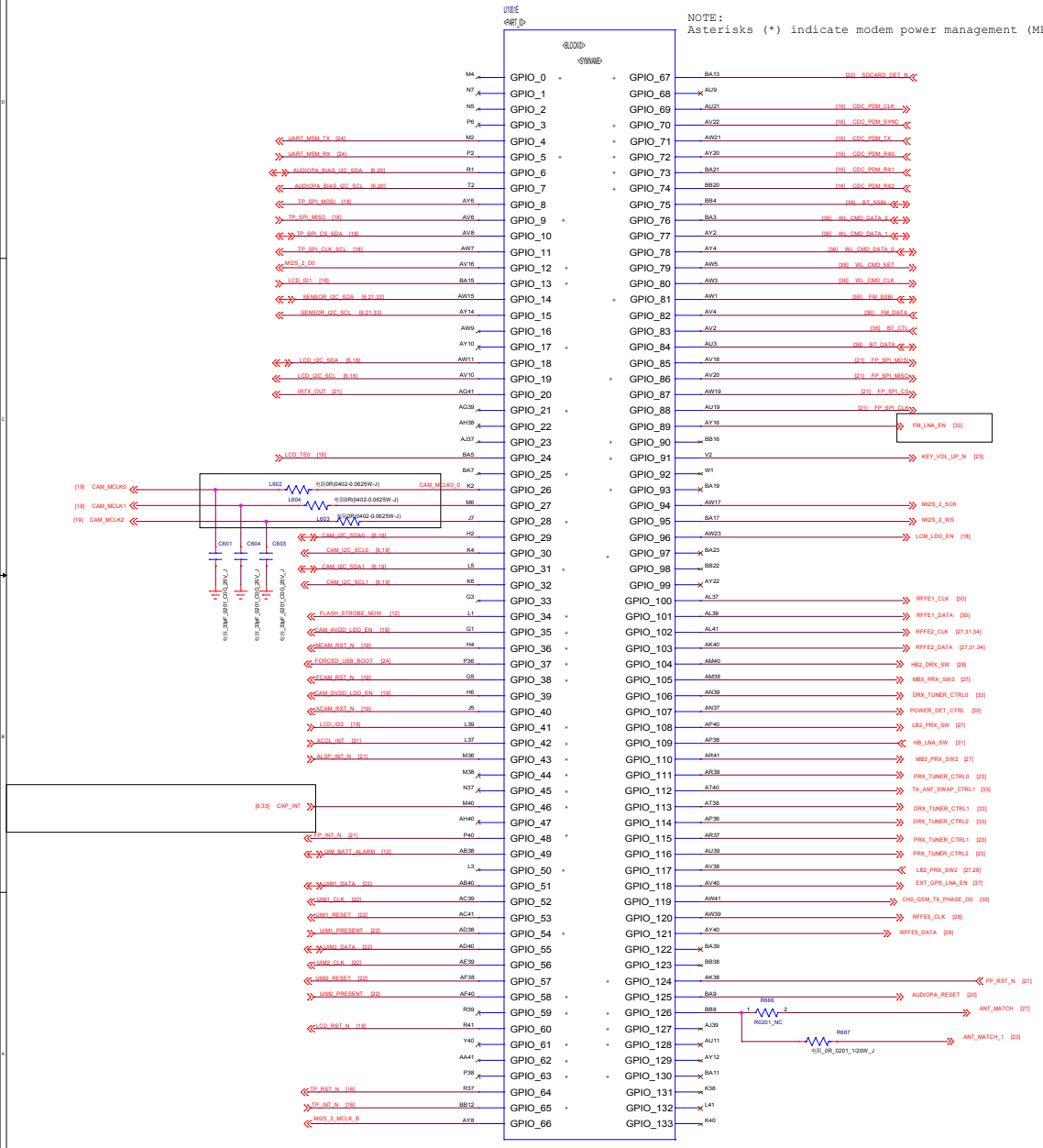

GPIO_37	FORCED USB BOOT
GPIO_3	MDSC DISABLE
GPIO_63	APPS BOOT FROM ROM
GPIO_111	BOOT CONFIG[1]
GPIO_112	BOOT CONFIG[2]
GPIO_88	BOOT CONFIG[3]

BOOT_CONFIG[3:1]	BOOT_CONFIG
0b000	SDC1 -> SDC2 -> USB2.0
0b001	SDC2 -> SDC1-> USB2.0
0b010	SDC1-> USB2.0
0b011	USB2.0

Default Root Config (0b000) is SDC1(eMMC)

I2C PULL-UP RESISTORS

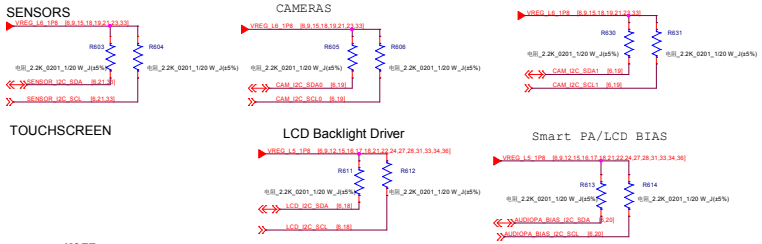

NOTE:
Ensure SW sets these GPIOs (Sensor, CTP and Camera I2C bus) to inout pull down when the peripherals are powered off to eliminate leakage.

SDM439

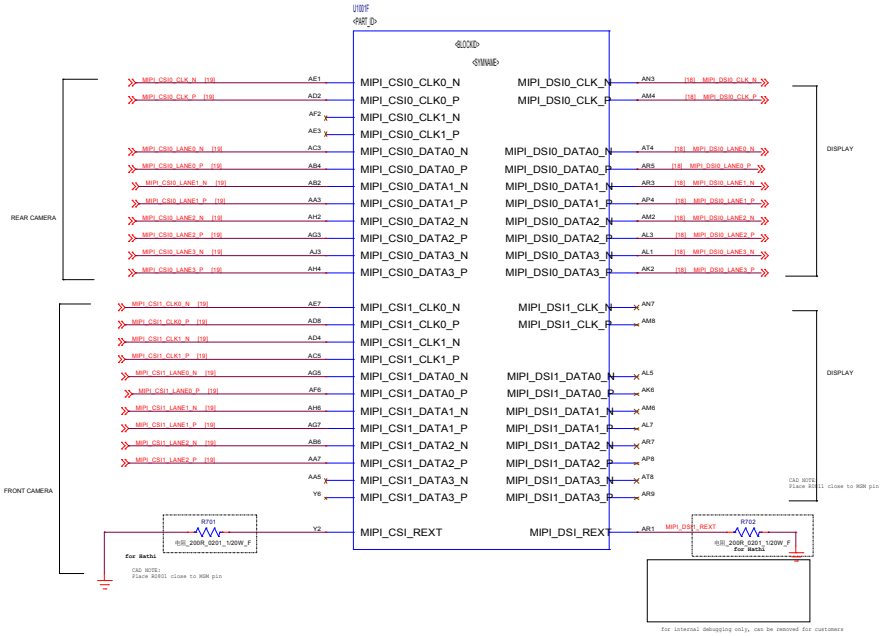
U100F
<PART_ID>
<LOCKID>
<VNAME>
REAR CAMERA
MIPI_CSI0_CLK_N [19]
MIPI_CSI0_CLK_P [19]
MIPI_CSI0_LANE0_N [19]
MIPI_CSI0_LANE0_P [19]
MIPI_CSI0_LANE1_N [19]
MIPI_CSI0_LANE1_P [19]
MIPI_CSI0_LANE2_N [19]
MIPI_CSI0_LANE2_P [19]
MIPI_CSI0_LANE3_N [19]
MIPI_CSI0_LANE3_P [19]
AE1 MIPI_CSI0_CLK0_N
AD2 MIPI_CSI0_CLK0_P
AF2 MIPI_CSI0_CLK1_N
AE3 MIPI_CSI0_CLK1_P
AC3 MIPI_CSI0_DATA0_N
AB4 MIPI_CSI0_DATA0_P
AB2 MIPI_CSI0_DATA1_N
AA3 MIPI_CSI0_DATA1_P
AH2 MIPI_CSI0_DATA2_N
AG3 MIPI_CSI0_DATA2_P
AJ3 MIPI_CSI0_DATA3_N
AH4 MIPI_CSI0_DATA3_P
MIPI_DSI0_CLK_N AN3 [18] MIPI_DSI0_CLK_N
MIPI_DSI0_CLK_P AM4 [18] MIPI_DSI0_CLK_P
MIPI_DSI0_DATA0_N AT4 [18] MIPI_DSI0_LANE0_N
MIPI_DSI0_DATA0_P AR5 [18] MIPI_DSI0_LANE0_P
MIPI_DSI0_DATA1_N AR3 [18] MIPI_DSI0_LANE1_N
MIPI_DSI0_DATA1_P AP4 [18] MIPI_DSI0_LANE1_P
MIPI_DSI0_DATA2_N AM2 [18] MIPI_DSI0_LANE2_N
MIPI_DSI0_DATA2_P AL3 [18] MIPI_DSI0_LANE2_P
MIPI_DSI0_DATA3_N AL1 [18] MIPI_DSI0_LANE3_N
MIPI_DSI0_DATA3_P AK2 [18] MIPI_DSI0_LANE3_P
DISPLAY
FRONT CAMERA
MIPI_CSI1_CLK0_N [19]
MIPI_CSI1_CLK0_P [19]
MIPI_CSI1_CLK1_N [19]
MIPI_CSI1_CLK1_P [19]
MIPI_CSI1_LANE0_N [19]
MIPI_CSI1_LANE0_P [19]
MIPI_CSI1_LANE1_N [19]
MIPI_CSI1_LANE1_P [19]
MIPI_CSI1_LANE2_N [19]
MIPI_CSI1_LANE2_P [19]
AE7 MIPI_CSI1_CLK0_N
AD8 MIPI_CSI1_CLK0_P
AD4 MIPI_CSI1_CLK1_N
AC5 MIPI_CSI1_CLK1_P
AG5 MIPI_CSI1_DATA0_N
AF6 MIPI_CSI1_DATA0_P
AH6 MIPI_CSI1_DATA1_N
AG7 MIPI_CSI1_DATA1_P
AB6 MIPI_CSI1_DATA2_N
AA7 MIPI_CSI1_DATA2_P
AA5 MIPI_CSI1_DATA3_N
Y6 MIPI_CSI1_DATA3_P
Y2 MIPI_CSI_REXT
MIPI_DSI1_CLK_N AN7
MIPI_DSI1_CLK_P AM8
MIPI_DSI1_DATA0_N AL5
MIPI_DSI1_DATA0_P AK6
MIPI_DSI1_DATA1_N AM6
MIPI_DSI1_DATA1_P AL7
MIPI_DSI1_DATA2_N AR7
MIPI_DSI1_DATA2_P AP8
MIPI_DSI1_DATA3_N AT8
MIPI_DSI1_DATA3_P AR9
MIPI_DSI_REXT AR1
DISPLAY
CAD NOTE:
Place R0911 close to MSM pin
R701
电阻_200R_0201_1/20W_F
for Hathi
CAD NOTE:
Place R0801 close to MSM pin
R702
电阻_200R_0201_1/20W_F
for Hatsil
for internal debugging only, can be removed for customers

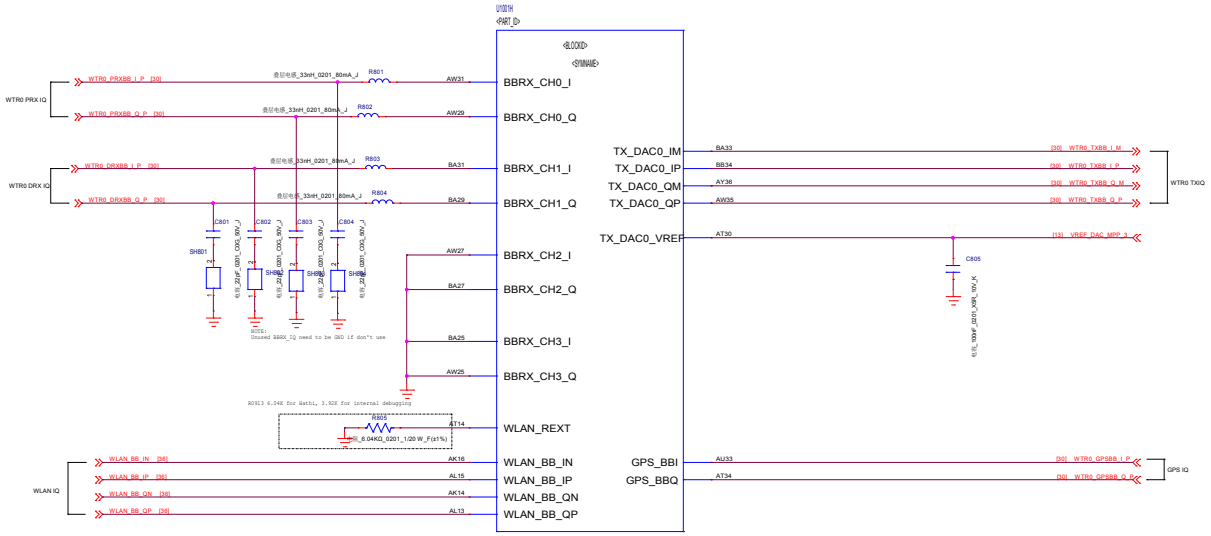

U1001H
<PART_ID>
<BLOCKID>
<SYMNAME>
WTR0 PRX IQ
WTR0_PRXBB_I_P [30]
WTR0_PRXBB_Q_P [30]
WTR0 DRX IQ
WTR0_DRXBB_I_P [30]
WTR0_DRXBB_Q_P [30]
R801
R802
R803
R804
AW31
AW29
BA31
BA29
BBRX_CH0_I
BBRX_CH0_Q
BBRX_CH1_I
BBRX_CH1_Q
C801
C802
C803
C804
SHB01
AW27
BA27
BA25
AW25
BBRX_CH2_I
BBRX_CH2_Q
BBRX_CH3_I
BBRX_CH3_Q
NOTE:
Unused BBRX_IQ need to be GND if don't use
R0913 6.04K for Hathi, 3.92K for internal debugging
R805
AT14
WLAN_REXT
WLAN IQ
WLAN_BB_IN [36]
WLAN_BB_IP [36]
WLAN_BB_QN [36]
WLAN_BB_QP [36]
AK16
AL15
AK14
AL13
WLAN_BB_IN
WLAN_BB_IP
WLAN_BB_QN
WLAN_BB_QP
TX_DAC0_IM
TX_DAC0_IP
TX_DAC0_QM
TX_DAC0_QP
TX_DAC0_VREF
GPS_BBI
GPS_BBQ
BA33
BB34
AY36
AW35
AT30
AU33
AT34
[30] WTR0_TXBB_I_M
[30] WTR0_TXBB_I_P
[30] WTR0_TXBB_Q_M
[30] WTR0_TXBB_Q_P
WTR0 TXIQ
[13] VREF_DAC_MPP_3
C805
[30] WTR0_GPSBB_I_P
[30] WTR0_GPSBB_Q_P
GPS IQ

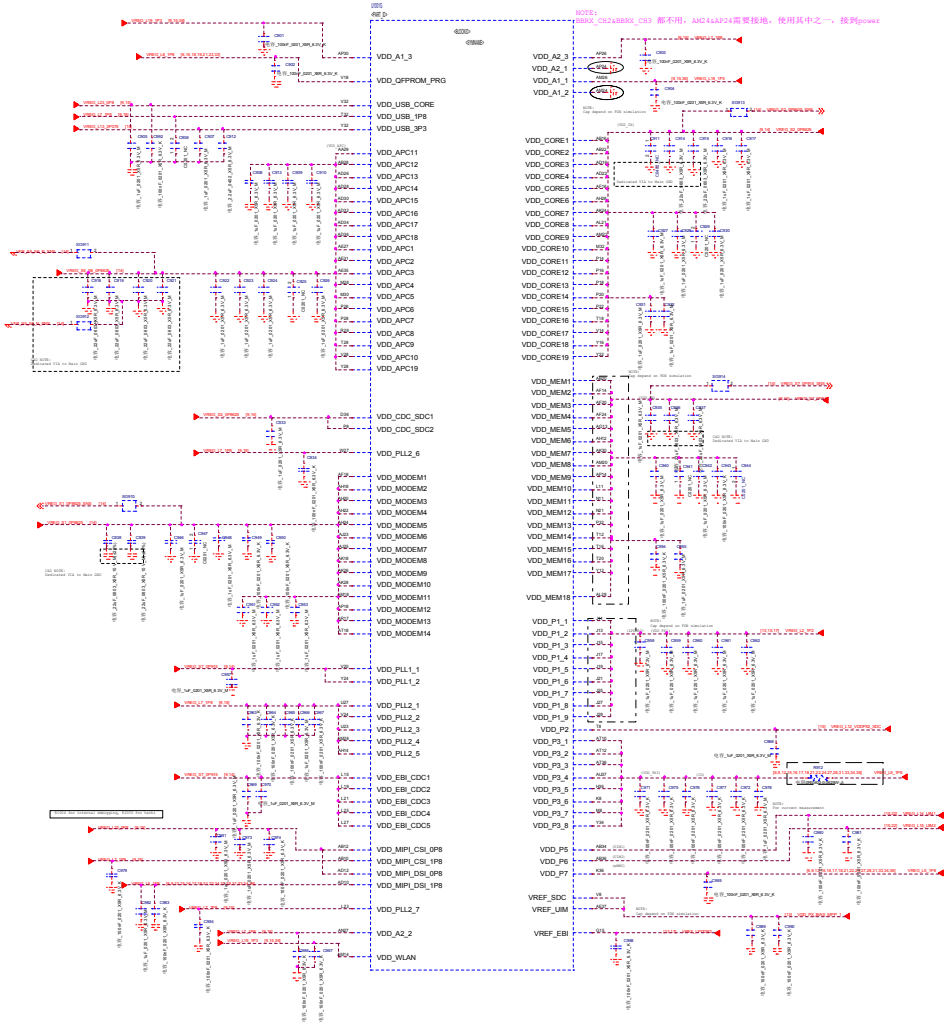
NOTE:
BBRX_CH2&BBRX_CH3 都不用，AM24&AP24需要接地，使用其中之一，接到power
VDD_A1_3
VDD_QFPROM_PRG
VDD_USB_CORE
VDD_USB_1P8
VDD_USB_3P3
VDD_APC11
VDD_APC12
VDD_APC13
VDD_APC14
VDD_APC15
VDD_APC16
VDD_APC17
VDD_APC18
VDD_APC1
VDD_APC2
VDD_APC3
VDD_APC4
VDD_APC5
VDD_APC6
VDD_APC7
VDD_APC8
VDD_APC9
VDD_APC10
VDD_APC19
VDD_CDC_SDC1
VDD_CDC_SDC2
VDD_PLL2_6
VDD_MODEM1
VDD_MODEM2
VDD_MODEM3
VDD_MODEM4
VDD_MODEM5
VDD_MODEM6
VDD_MODEM7
VDD_MODEM8
VDD_MODEM9
VDD_MODEM10
VDD_MODEM11
VDD_MODEM12
VDD_MODEM13
VDD_MODEM14
VDD_PLL1_1
VDD_PLL1_2
VDD_PLL2_1
VDD_PLL2_2
VDD_PLL2_3
VDD_PLL2_4
VDD_PLL2_5
VDD_EBI_CDC1
VDD_EBI_CDC2
VDD_EBI_CDC3
VDD_EBI_CDC4
VDD_EBI_CDC5
VDD_MIPI_CSI_0P8
VDD_MIPI_CSI_1P8
VDD_MIPI_DSI_0P8
VDD_MIPI_DSI_1P8
VDD_PLL2_7
VDD_A2_2
VDD_WLAN
VDD_A2_3
VDD_A2_1
VDD_A1_1
VDD_A1_2
VDD_CORE1
VDD_CORE2
VDD_CORE3
VDD_CORE4
VDD_CORE5
VDD_CORE6
VDD_CORE7
VDD_CORE8
VDD_CORE9
VDD_CORE10
VDD_CORE11
VDD_CORE12
VDD_CORE13
VDD_CORE14
VDD_CORE15
VDD_CORE16
VDD_CORE17
VDD_CORE18
VDD_CORE19
VDD_MEM1
VDD_MEM2
VDD_MEM3
VDD_MEM4
VDD_MEM5
VDD_MEM6
VDD_MEM7
VDD_MEM8
VDD_MEM9
VDD_MEM10
VDD_MEM11
VDD_MEM12
VDD_MEM13
VDD_MEM14
VDD_MEM15
VDD_MEM16
VDD_MEM17
VDD_MEM18
VDD_P1_1
VDD_P1_2
VDD_P1_3
VDD_P1_4
VDD_P1_5
VDD_P1_6
VDD_P1_7
VDD_P1_8
VDD_P1_9
VDD_P2
VDD_P3_1
VDD_P3_2
VDD_P3_3
VDD_P3_4
VDD_P3_5
VDD_P3_6
VDD_P3_7
VDD_P3_8
VDD_P5
VDD_P6
VDD_P7
VREF_SDC
VREF_UIM
VREF_EBI

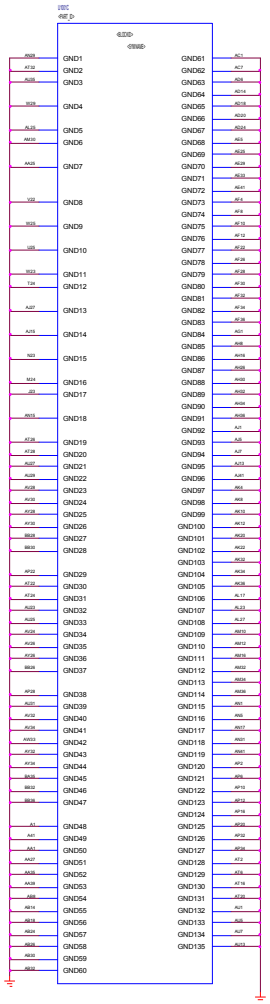
U101
<REF_D>
<LIDD>
<STAME>
AB29 GND1
AT32 GND2
AU29 GND3
W29 GND4
AL35 GND5
AA40 GND6
AA25 GND7
V22 GND8
W25 GND9
U25 GND10
W23 GND11
T34 GND12
A27 GND13
A25 GND14
N23 GND15
M34 GND16
J23 GND17
AW3 GND18
AT26 GND19
AT28 GND20
AU27 GND21
AU29 GND22
AU28 GND23
AU30 GND24
AT28 GND25
AY32 GND26
BB28 GND27
BB30 GND28
AP22 GND29
AT24 GND30
AT24 GND31
AU23 GND32
AU25 GND33
AU24 GND34
AU26 GND35
AT26 GND36
BB28 GND37
AP28 GND38
AU31 GND39
AU32 GND40
AU34 GND41
AW33 GND42
AT32 GND43
AT34 GND44
BA35 GND45
BB32 GND46
BB36 GND47
A1 GND48
A41 GND49
AA1 GND50
AA27 GND51
AA35 GND52
AA38 GND53
AB8 GND54
AB14 GND55
AB18 GND56
AB24 GND57
AB26 GND58
AB30 GND59
AB32 GND60
GND61 AC1
GND62 AC7
GND63 AD9
GND64 AD14
GND65 AD18
GND66 AD20
GND67 AD24
GND68 AE5
GND69 AE25
GND70 AE29
GND71 AE33
GND72 AE41
GND73 AF4
GND74 AF8
GND75 AF15
GND76 AF22
GND77 AF24
GND78 AF26
GND79 AF28
GND80 AF30
GND81 AF32
GND82 AF34
GND83 AF36
GND84 AG1
GND85 AH8
GND86 AH18
GND87 AH26
GND88 AH30
GND89 AH32
GND90 AH36
GND91 AH38
GND92 AJ1
GND93 AJ5
GND94 AJ7
GND95 AJ13
GND96 AJ41
GND97 AK4
GND98 AK5
GND99 AK13
GND100 AK12
GND101 AK20
GND102 AK22
GND103 AK32
GND104 AK36
GND105 AK38
GND106 AL17
GND107 AL23
GND108 AL27
GND109 AM10
GND110 AM12
GND111 AM16
GND112 AM32
GND113 AM34
GND114 AM38
GND115 AN1
GND116 AN6
GND117 AN27
GND118 AN31
GND119 AN41
GND120 AP2
GND121 AP5
GND122 AP10
GND123 AP12
GND124 AP18
GND125 AP20
GND126 AP32
GND127 AP36
GND128 AT2
GND129 AT5
GND130 AT16
GND131 AT20
GND132 AU1
GND133 AU5
GND134 AU7
GND135 AU13

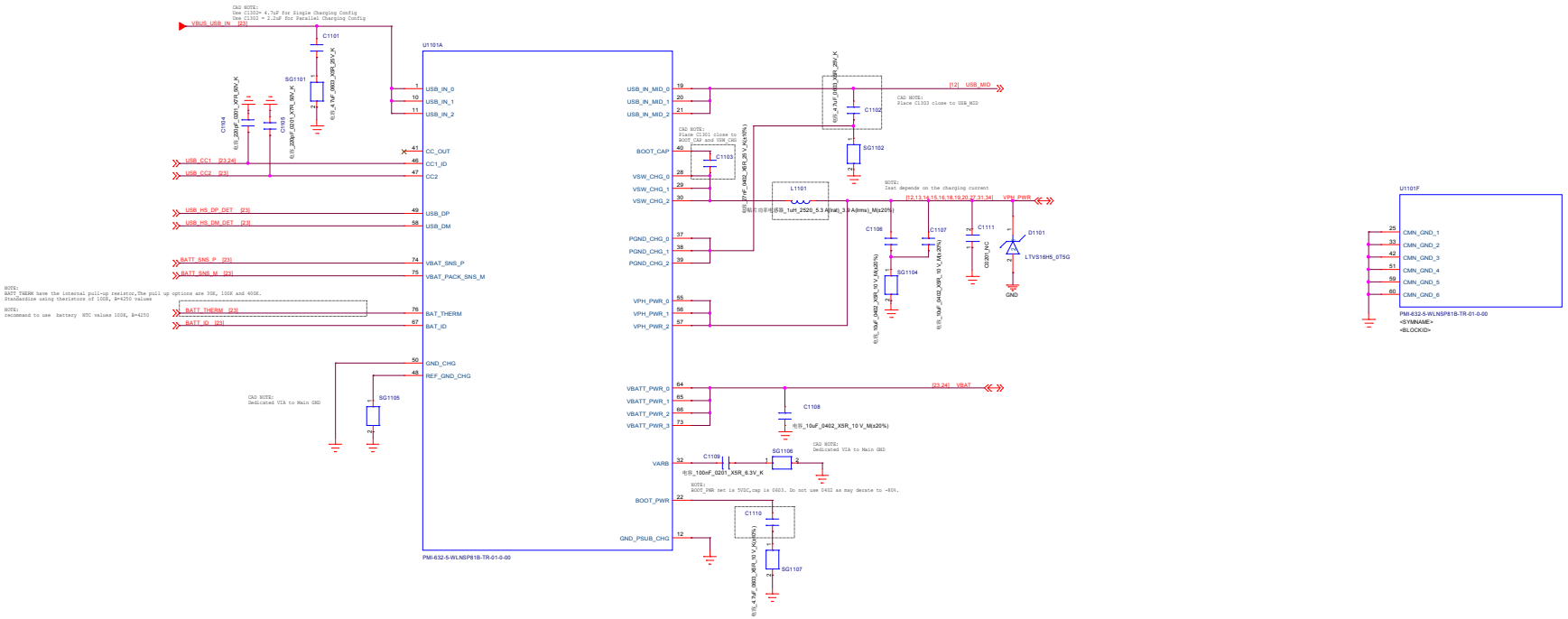

CAD NOTE:
Use C1302= 4.7uF for Single Charging Config
Use C1302 = 2.2uF for Parallel Charging Config
VBUS_USB_IN [23]
C1101
SG1101
C1104
C1105
U1101A
USB_IN_0
USB_IN_1
USB_IN_2
CC_OUT
CC1_ID
CC2
USB_DP
USB_DM
VBAT_SNS_P
VBAT_PACK_SNS_M
BAT_THERM
BAT_ID
GND_CHG
REF_GND_CHG
USB_CC1 [23,24]
USB_CC2 [23]
USB_HS_DP_DET [23]
USB_HS_DM_DET [23]
BATT_SNS_P [23]
BATT_SNS_M [23]
BATT_THERM [23]
BATT_ID [23]
NOTE:
BATT_THERM have the internal pull-up resistor,The pull up options are 30K, 100K and 400K.
Standardize using theristors of 100K, B=4250 values
NOTE:
recommand to use battery NTC values 100K, B=4250
CAD NOTE:
Dedicated VIA to Main GND
SG1105
USB_IN_MID_0
USB_IN_MID_1
USB_IN_MID_2
BOOT_CAP
VSW_CHG_0
VSW_CHG_1
VSW_CHG_2
PGND_CHG_0
PGND_CHG_1
PGND_CHG_2
VPH_PWR_0
VPH_PWR_1
VPH_PWR_2
VBATT_PWR_0
VBATT_PWR_1
VBATT_PWR_2
VBATT_PWR_3
VARB
BOOT_PWR
GND_PSUB_CHG
PMI-632-5-WLNSP81B-TR-01-0-00
[12] USB_MID
C1102
SG1102
CAD NOTE:
Place C1303 close to USB_MID
CAD NOTE:
Place C1301 close to BOOT_CAP and VSW_CHG
C1103
L1101
NOTE:
Isat depends on the charging current
[12,13,14,15,16,18,19,20,27,31,34] VPH_PWR
C1106
C1107
C1111
D1101
LTVS16HS_0TSG
GND
SG1104
C1108
[23,24] VBAT
C1109
SG1106
CAD NOTE:
Dedicated VIA to Main GND
NOTE:
BOOT_PWR net is 5VDC,cap is 0603. Do not use 0402 as may derate to -80%.
C1110
SG1107
U1101F
CMN_GND_1
CMN_GND_2
CMN_GND_3
CMN_GND_4
CMN_GND_5
CMN_GND_6
PMI-632-5-WLNSP81B-TR-01-0-00
<SYMNAME>
<BLOCKID>

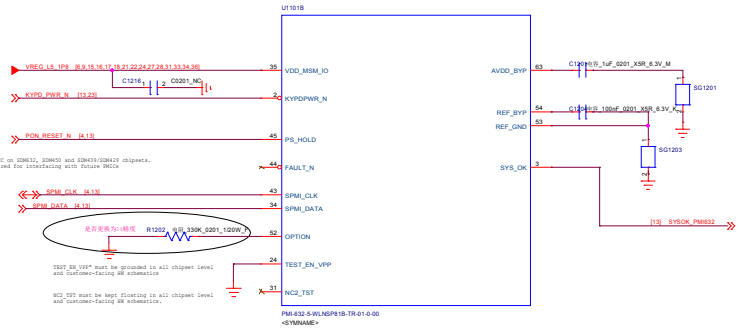

PON Configuration (OPTION PIN)	PD Resistance
SPMI, uUSB	1K
I2C, uUSB	22K
I2C, TypeC	510K
SPMI, TypeC	1M

PON CONFIGURATIONS

PON Configuration	Option resistor range
SPMI, Micro USB, FMB_DIS	R = (Ground, 1K, 1.2K, 1.5K, 1.8K, and 2.2K)
SPMI, Micro USB, FMB_EN	R = (3.3K, 3.9K, 4.7K, and 5.6K)
I2C, Micro USB, FMB_DIS	R = (8.2K, 10K, 12K, and 15K)
I2C, Micro USB, FMB_EN	R = (22K, 27K, 33K, and 39K)
I2C, Type-C, FMB_DIS	R = (56K, 68K, 82K, and 100K)
I2C, Type-C, FMB_EN	R = (150K, 180K, and 220K)
SPMI, Type-C, FMB_DIS	R = (330K, 390K, and 470K)
SPMI, Type-C, FMB_EN	R = (820K, 1M, 1.2M, and Open)

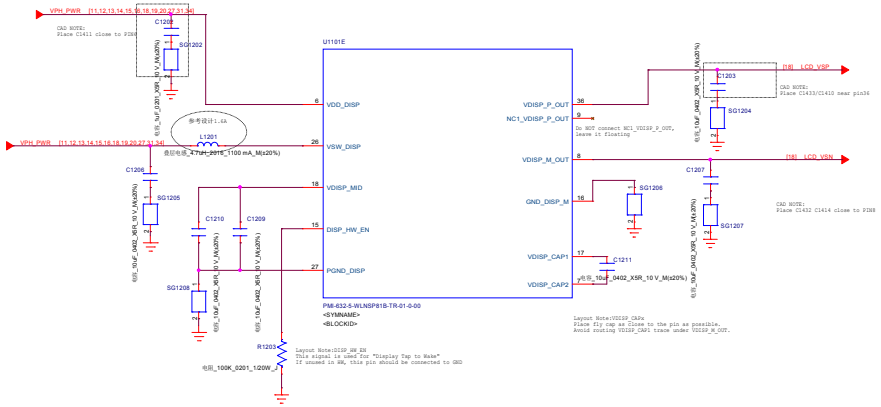

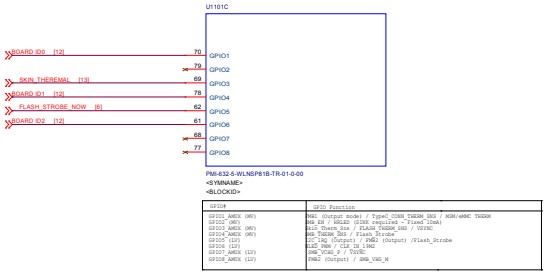

GPIO#	GPIO Function
GPIO1_AMUX (MF)	PWM1 (Output mode) / TypeC_CONN_THERM_SRC / MSM/eMMC THERM
GPIO2 (MF)	MSM_EN / BALED (SCHK required - Fixed 10mA)
GPIO3_AMUX (MF)	Skin_Therm_Scn / FLASH_THERM_SRC / VSYNC
GPIO4_AMUX (MF)	Msm_Therm_Src / Flash_Strobe
GPIO5 (LP)	LDC_LAQ (Output) / PWM2 (Output) /Flash_Strobe
GPIO6 (LP)	BLED_PWM / CLK_18_19MC
GPIO7_AMUX (LP)	SMB_VCMQ_P / VSYNC
GPIO8_AMUX (LP)	PWM2 (Output) / SMB_VAG_M

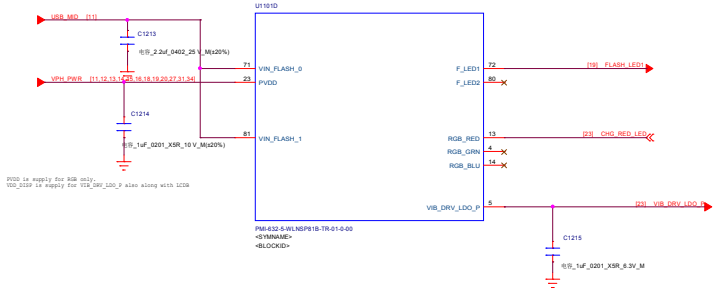

BOARD ID0用于项目区分

BOARD ID1用于配置区分

BOARD ID2暂未使用

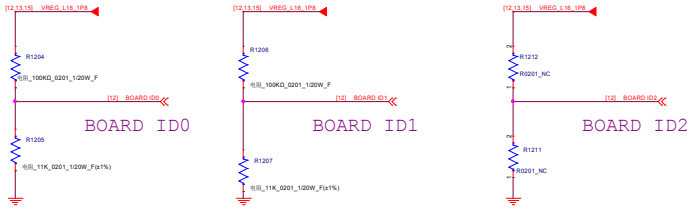

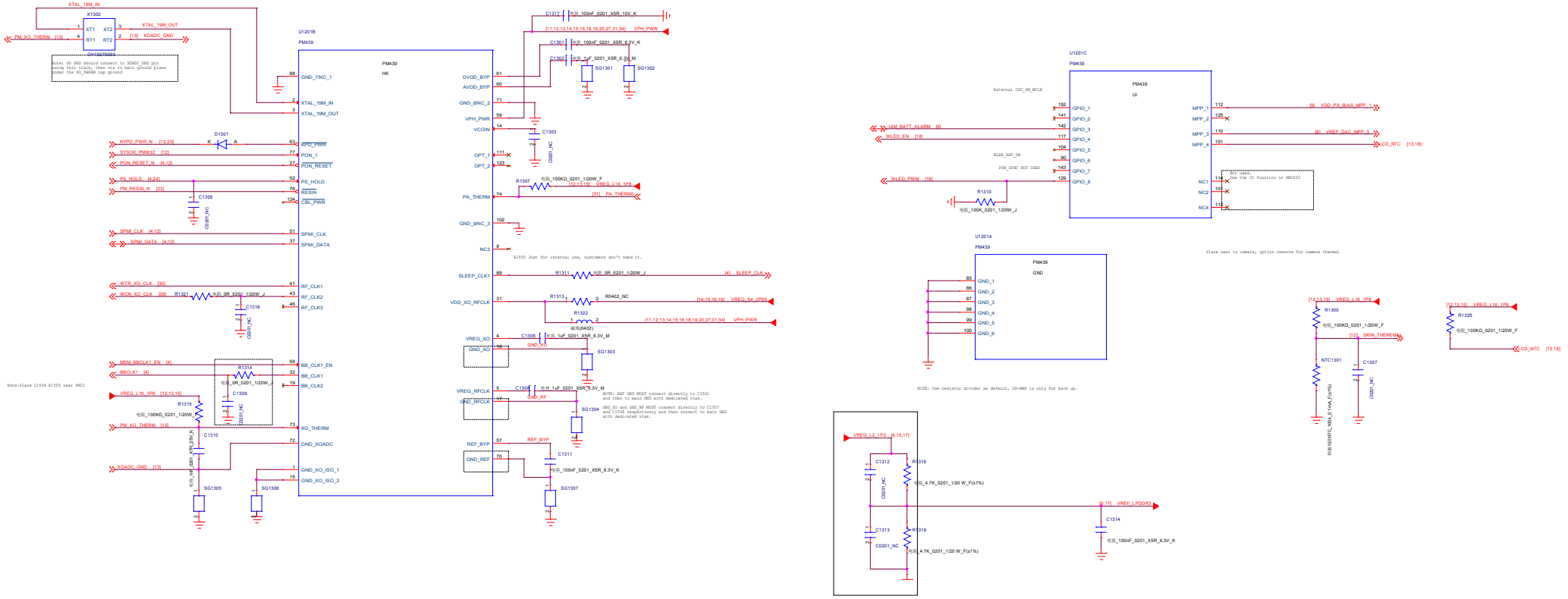

U1201B
PM439
HK
U1201C
PM439
UI
U1201A
PM439
GND
X1302
XTAL_19M_IN
XTAL_19M_OUT
XOADC_GND
PM_XO_THERM [13]
Note: NO GND should connect to XOADC_GND pin using thin trace, then via to main ground plane under the XO_THERM cap ground
KYPD_PWR_N [12,23]
SYSOK_PM8632 [12]
PON_RESET_N [4,12]
PS_HOLD [4,24]
PM_RESIN_N [23]
SPMI_CLK [4,12]
SPMI_DATA [4,12]
WTR_XO_CLK [30]
WCN_XO_CLK [36]
MSM_BBCLK1_EN [4]
BBCLK1 [4]
VREG_L16_1P8 [12,13,15]
PM_XO_THERM [13]
XOADC_GND [13]
Note:Place C1509 R1505 near PMIC
R1555 Just for internal use, customers don't need it.
NOTE: REF GND MUST connect directly to C1501 and then to main GND with dedicated vias.
GND_XO and GND_RF MUST connect directly to C1507 and C1508 respectively and then connect to main GND with dedicated vias.
External CDC_PM_MCLK
WLED_EN [18]
WLED_PWM [18]
Not used. Use the CC function in PM8632
Place near to camera, option reserve for camera thermal
NOTE: Use resistor divider as default, OP-AMP is only for back up.
VREG_L2_1P2 [9,15,17]
VREF_LPDDR3

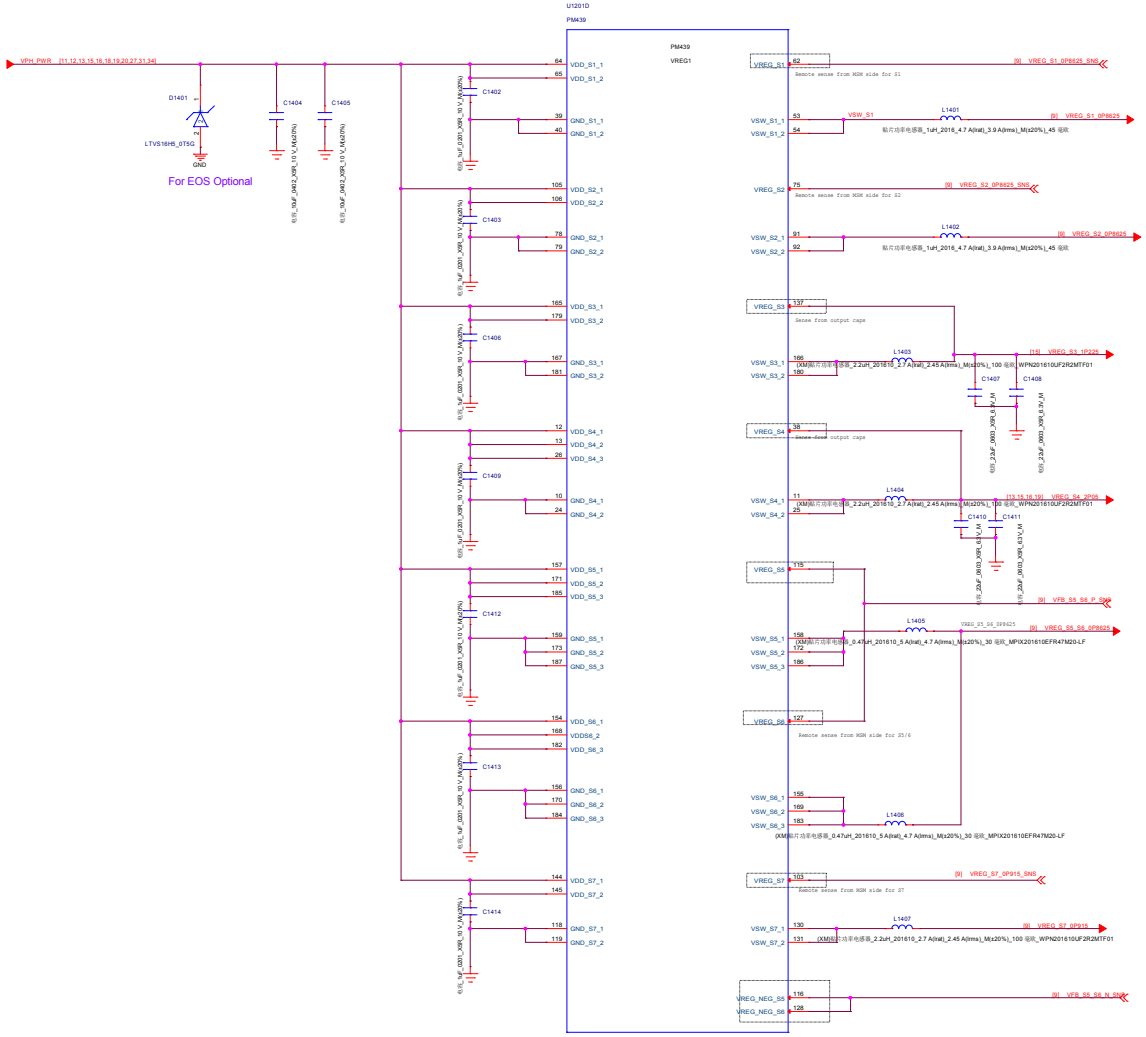
U1201D
PM439
PM439
VREG1
VPH_PWR [11,12,13,15,16,18,19,20,27,31,34]
D1401
LTVS16H5_0T5G
GND
For EOS Optional
C1404
C1405
C1402
C1403
C1406
C1409
C1412
C1413
C1414
VDD_S1_1
VDD_S1_2
GND_S1_1
GND_S1_2
VDD_S2_1
VDD_S2_2
GND_S2_1
GND_S2_2
VDD_S3_1
VDD_S3_2
GND_S3_1
GND_S3_2
VDD_S4_1
VDD_S4_2
VDD_S4_3
GND_S4_1
GND_S4_2
VDD_S5_1
VDD_S5_2
VDD_S5_3
GND_S5_1
GND_S5_2
GND_S5_3
VDD_S6_1
VDDS6_2
VDD_S6_3
GND_S6_1
GND_S6_2
GND_S6_3
VDD_S7_1
VDD_S7_2
GND_S7_1
GND_S7_2
VREG_S1
Remote sense from MGN side for S1
VSW_S1_1
VSW_S1_2
VSW_S1
L1401
[9] VREG_S1_0P8625_SNS
[9] VREG_S1_0P8625
VREG_S2
Remote sense from MGN side for S2
VSW_S2_1
VSW_S2_2
L1402
[9] VREG_S2_0P8625_SNS
[9] VREG_S2_0P8625
VREG_S3
Sense from output caps
VSW_S3_1
VSW_S3_2
L1403
[13] VREG_S3_1P2125
C1407
C1408
VREG_S4
Sense from output caps
VSW_S4_1
VSW_S4_2
L1404
[13,15,18,19] VREG_S4_0P95
C1410
C1411
VREG_S5
VSW_S5_1
VSW_S5_2
VSW_S5_3
L1405
VREG_S5_S6_0P8625
[9] VREG_S5_S6_0P8625
[9] VFB_S5_S6_P_SNS
VREG_S6
Remote sense from MGN side for S5/6
VSW_S6_1
VSW_S6_2
VSW_S6_3
L1406
VREG_S7
Remote sense from MGN side for S7
VSW_S7_1
VSW_S7_2
L1407
[9] VREG_S7_0P915_SNS
[9] VREG_S7_0P915
VREG_NEG_S5
VREG_NEG_S6
[9] VFB_S5_S6_N_SNS

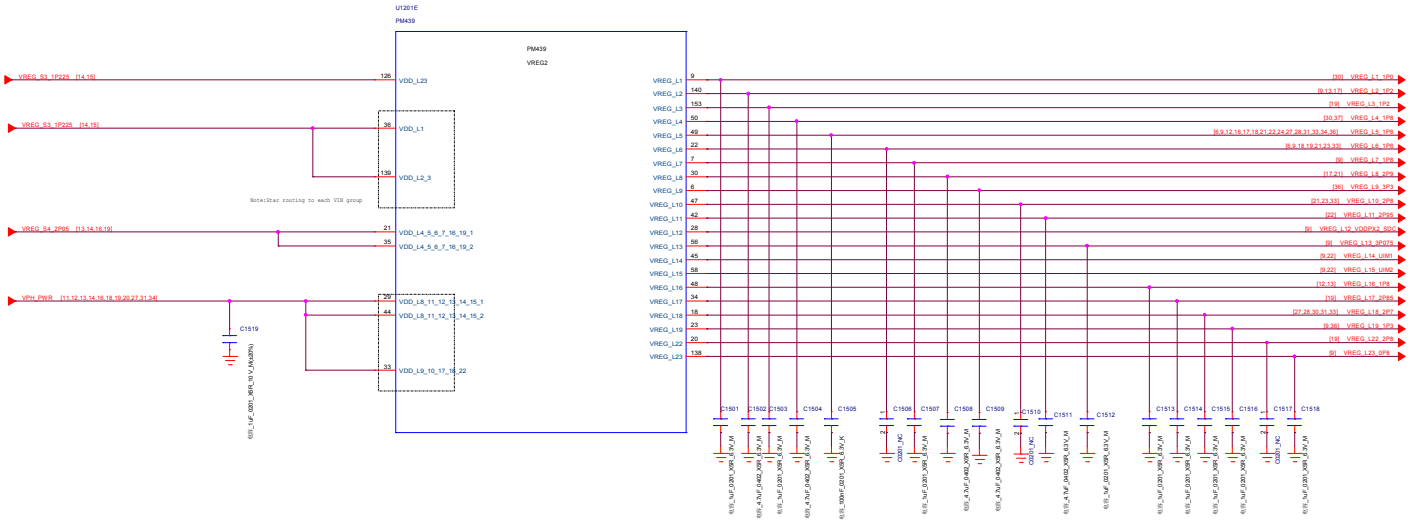
U1201E
PM439
PM439
VREG2
VREG_S3_1P225 [14,15]
VREG_S3_1P225 [14,15]
VREG_S4_2P05 [13,14,16,19]
VPH_PWR [11,12,13,14,16,18,19,20,27,31,34]
VDD_L23
VDD_L1
VDD_L2_3
VDD_L4_5_6_7_16_19_1
VDD_L4_5_6_7_16_19_2
VDD_L8_11_12_13_14_15_1
VDD_L8_11_12_13_14_15_2
VDD_L9_10_17_18_22
Note:Star routing to each VIN group
C1519
VREG_L1
VREG_L2
VREG_L3
VREG_L4
VREG_L5
VREG_L6
VREG_L7
VREG_L8
VREG_L9
VREG_L10
VREG_L11
VREG_L12
VREG_L13
VREG_L14
VREG_L15
VREG_L16
VREG_L17
VREG_L18
VREG_L19
VREG_L22
VREG_L23
[30] VREG_L1_1P0
[9,13,17] VREG_L2_1P2
[19] VREG_L3_1P2
[30,37] VREG_L4_1P8
[8,9,12,16,17,18,21,22,24,27,28,31,33,34,36] VREG_L5_1P8
[8,9,18,19,21,23,33] VREG_L6_1P8
[9] VREG_L7_1P8
[17,21] VREG_L8_2P9
[36] VREG_L9_3P3
[21,23,33] VREG_L10_2P8
[22] VREG_L11_2P95
[9] VREG_L12_VDDPX2_SDC
[9] VREG_L13_3P075
[9,22] VREG_L14_UIM1
[9,22] VREG_L15_UIM2
[12,13] VREG_L16_1P8
[19] VREG_L17_2P85
[27,28,30,31,33] VREG_L18_2P7
[9,36] VREG_L19_1P3
[19] VREG_L22_2P8
[9] VREG_L23_0P8
C1501
C1502
C1503
C1504
C1505
C1506
C1507
C1508
C1509
C1510
C1511
C1512
C1513
C1514
C1515
C1516
C1517
C1518

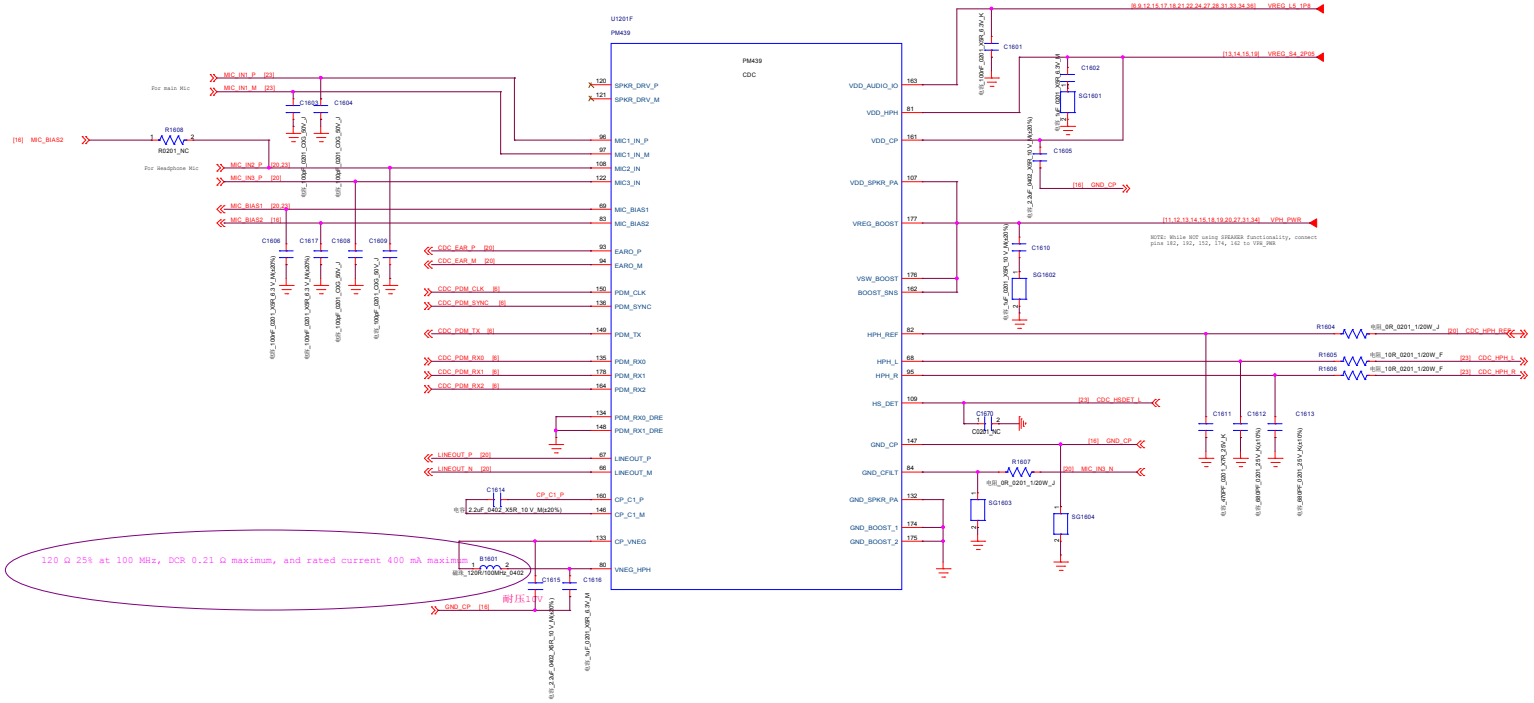
U1201F
PM439
PM439
CDC
For main Mic
For Headphone Mic
[16] MIC_BIAS2
R1608
R0201_NC
MIC_IN1_P [23]
MIC_IN1_M [23]
MIC_IN2_P [20,23]
MIC_IN3_P [20]
MIC_BIAS1 [20,23]
MIC_BIAS2 [16]
C1603
C1604
C1606
C1617
C1608
C1609
SPKR_DRV_P
SPKR_DRV_M
MIC1_IN_P
MIC1_IN_M
MIC2_IN
MIC3_IN
MIC_BIAS1
MIC_BIAS2
EARO_P
EARO_M
CDC_EAR_P [20]
CDC_EAR_M [20]
CDC_PDM_CLK [8]
CDC_PDM_SYNC [8]
PDM_CLK
PDM_SYNC
CDC_PDM_TX [8]
PDM_TX
CDC_PDM_RX0 [8]
CDC_PDM_RX1 [8]
CDC_PDM_RX2 [8]
PDM_RX0
PDM_RX1
PDM_RX2
PDM_RX0_DRE
PDM_RX1_DRE
LINEOUT_P [20]
LINEOUT_N [20]
LINEOUT_P
LINEOUT_M
C1614
CP_C1_P
2.2uF_0402_X5R_10 V_M(±20%)
CP_C1_M
CP_VNEG
B1601
VNEG_HPH
C1615
C1616
GND_CP [16]
120 Ω 25% at 100 MHz, DCR 0.21 Ω maximum, and rated current 400 mA maximum
耐压10V
VDD_AUDIO_IO
VDD_HPH
VDD_CP
VDD_SPKR_PA
VREG_BOOST
VSW_BOOST
BOOST_SNS
HPH_REF
HPH_L
HPH_R
HS_DET
GND_CP
GND_CFILT
GND_SPKR_PA
GND_BOOST_1
GND_BOOST_2
[8,9,12,15,17,18,21,22,24,27,28,31,33,34,38] VREG_L5_1P8
C1601
[13,14,15,19] VREG_S4_2P05
C1602
SG1601
C1605
[16] GND_CP
[11,12,13,14,15,18,19,20,27,31,34] VPH_PWR
NOTE: While NOT using SPEAKER functionality, connect pins 182, 192, 152, 174, 162 to VPH_PWR
C1610
SG1602
R1604
R1605
R1606
[20] CDC_HPH_REF
[23] CDC_HPH_L
[23] CDC_HPH_R
[23] CDC_HSDET_L
C1670
C0201_NC
[16] GND_CP
R1607
[20] MIC_IN3_N
SG1603
SG1604
C1611
C1612
C1613

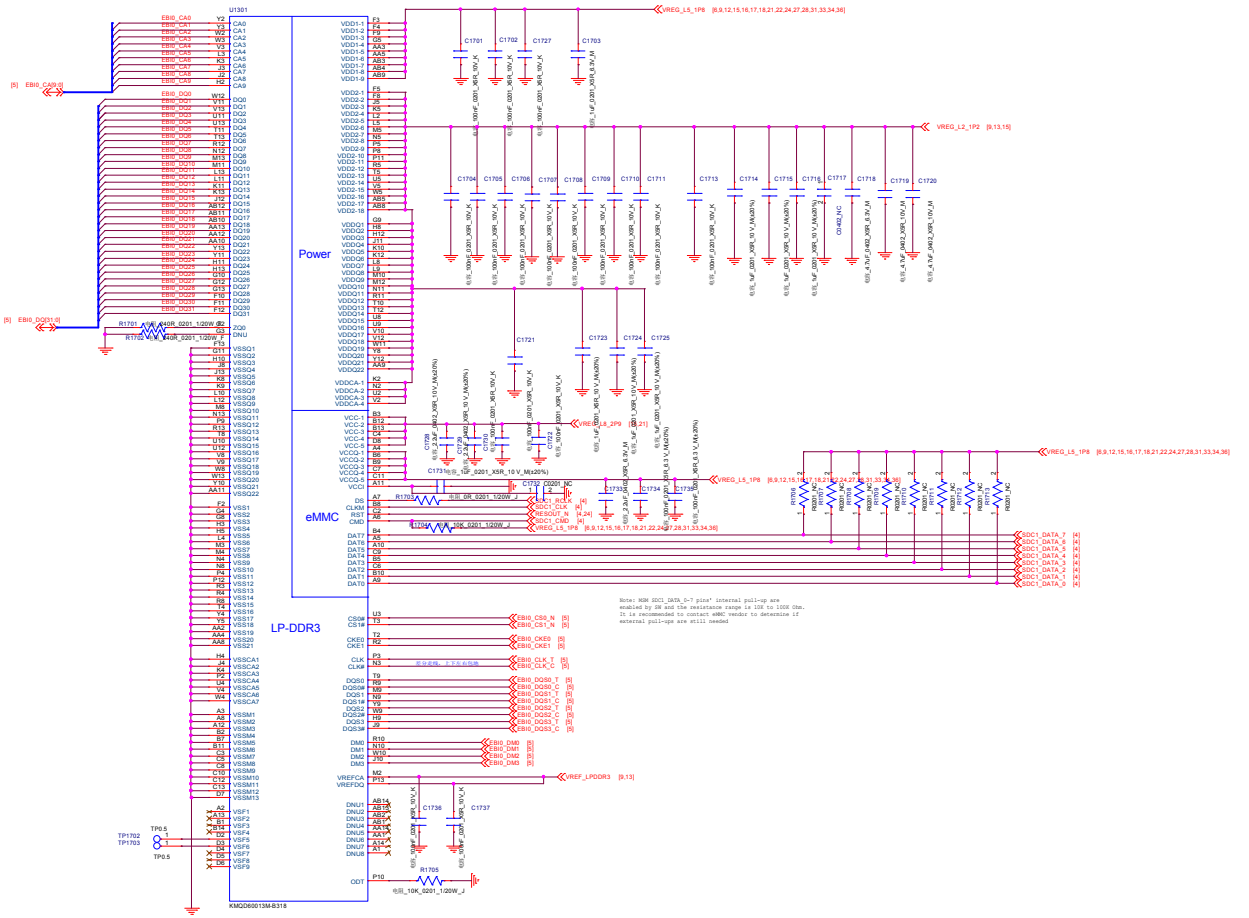
U1301
Power
eMMC
LP-DDR3
KMQD60013M-B318
VREG_L5_1P8 [8,9,12,15,16,17,18,21,22,24,27,28,31,33,34,36]
VREG_L2_1P2 [9,13,15]
VREF_LPDDR3 [9,13]
EBI0_CS0_N [5]
EBI0_CS1_N [5]
EBI0_CKE0 [5]
EBI0_CKE1 [5]
EBI0_CLK_T [5]
EBI0_CLK_C [5]
EBI0_DQS0_T [5]
EBI0_DQS0_C [5]
EBI0_DQS1_T [5]
EBI0_DQS1_C [5]
EBI0_DQS2_T [5]
EBI0_DQS2_C [5]
EBI0_DQS3_T [5]
EBI0_DQS3_C [5]
EBI0_DM0 [5]
EBI0_DM1 [5]
EBI0_DM2 [5]
EBI0_DM3 [5]
SDC1_DATA_7 [4]
SDC1_DATA_6 [4]
SDC1_DATA_5 [4]
SDC1_DATA_4 [4]
SDC1_DATA_3 [4]
SDC1_DATA_2 [4]
SDC1_DATA_1 [4]
SDC1_DATA_0 [4]
Note: HSM SDC1_DATA_0~7 pins' internal pull-up are enabled by SW and the resistance range is 10K to 100K Ohm. It is recommended to contact eMMC vendor to determine if external pull-ups are still needed

LCD

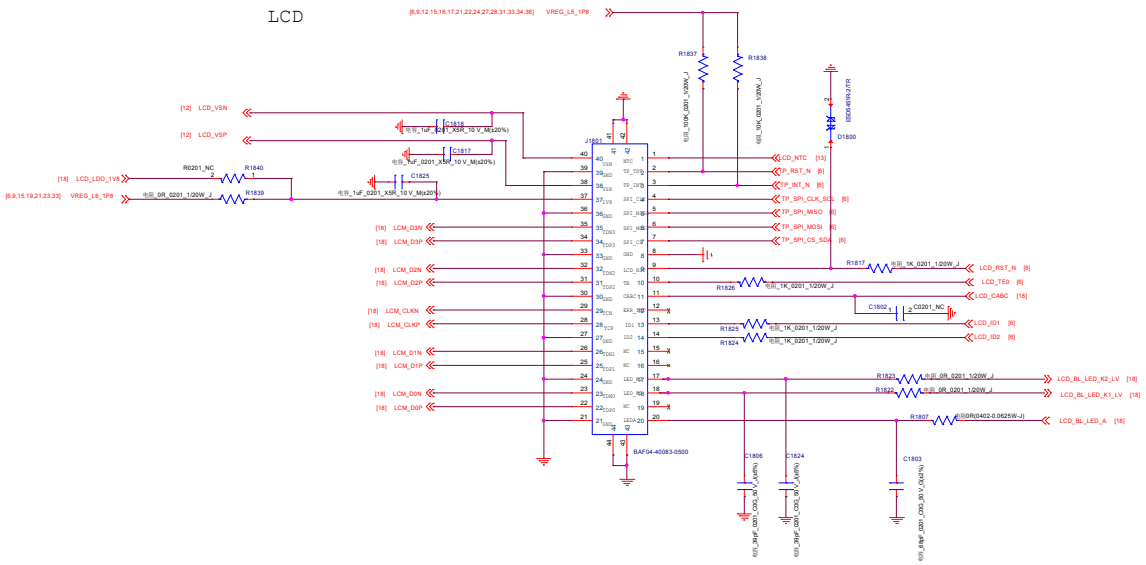

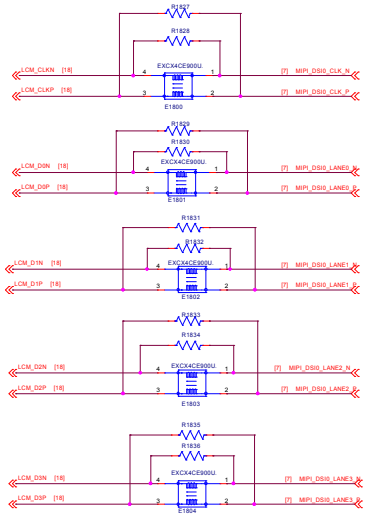

厂家	I2C ADDRESS	SENSOR IC
RTG	CK 36---0110110	RTG3136
TI	CK 36---0110110	LM3697

LCD-BACKLIGHT

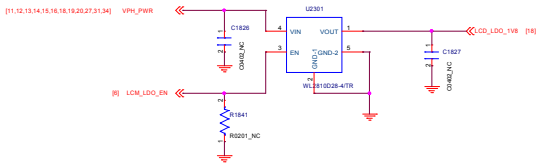

LCD backlight

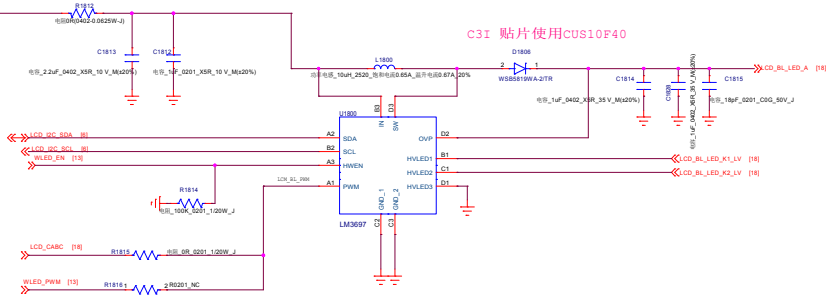

厂家	I2C READ	I2C WRITE	SENSOR IC
后钛微	GX 21	GX 20	ima363
后钛微	GX 21	GX 20	ima486
			S5K2L7

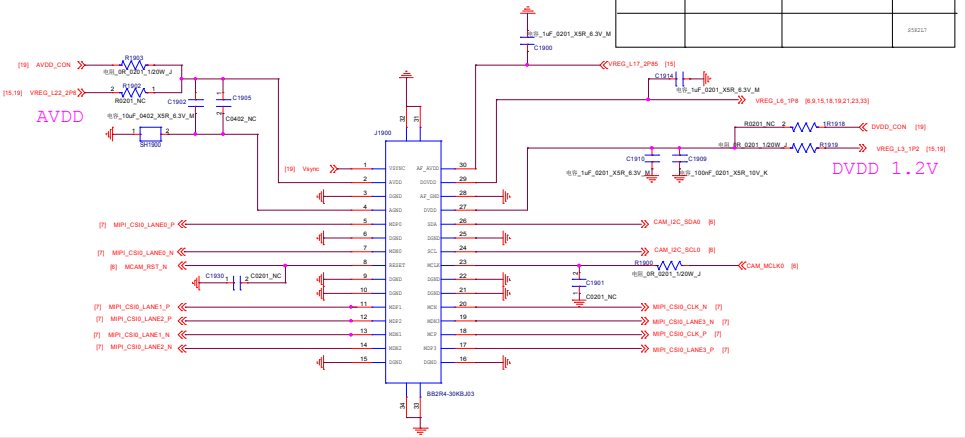

厂家	I2C READ	I2C WRITE	SENSOR IC
后钛微	GX 7A	GX 7A	OV02A10-G4A
舜宇	GX 2F	GX 2E	GC2375

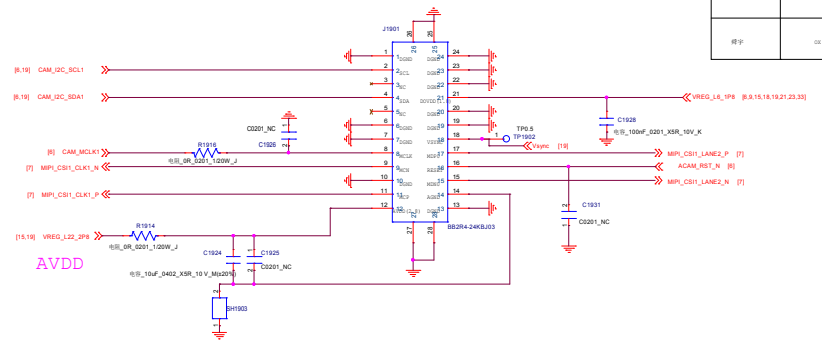

厂家	I2C READ	I2C WRITE	IC
后钛微	GX 6D	GX 6C	OV8856

Rear Camera Flash FH15B

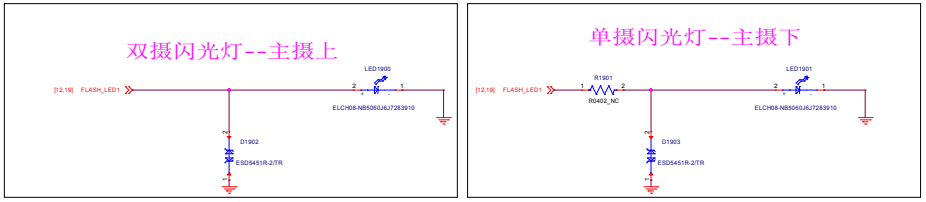

Front Camera 8M

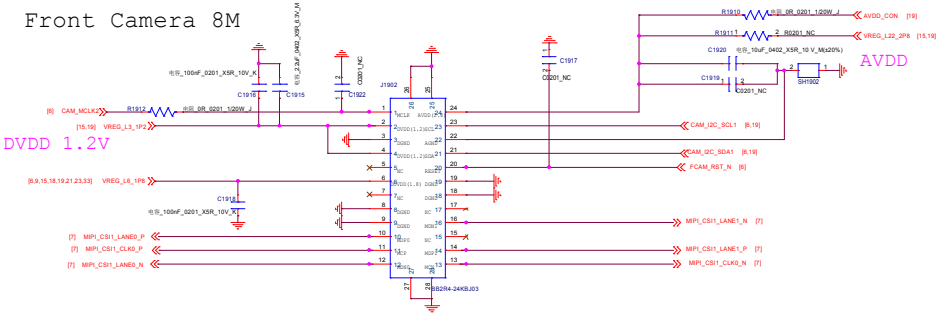

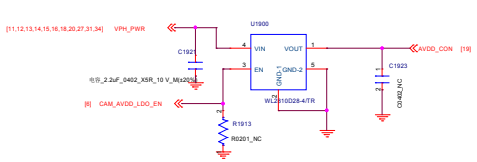

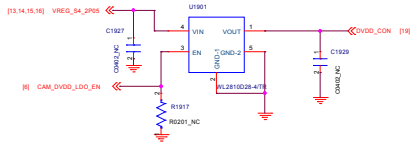

File: ARES_MB_V1		
Size: D	Document Number: <Doc>	Rev: V1.0
Date: Thursday, June 27, 2019	Sheet 19 of 33	

AUDIO PA

厂家	I2C ADDRESS
AW87519 A2接GND	0X58=1011000

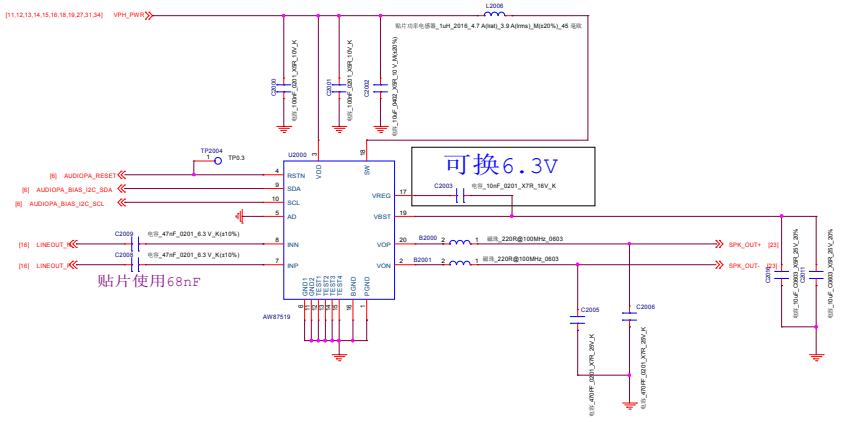

RECEIVER

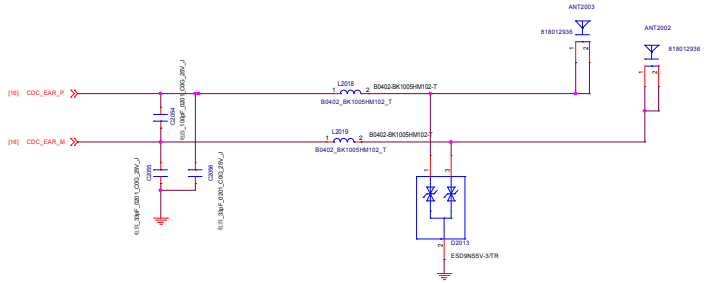

American Standard EARPHONE

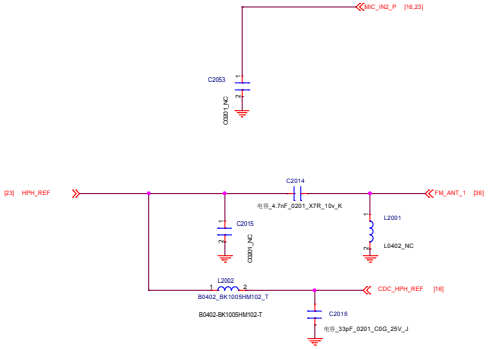

MIC -- Sub

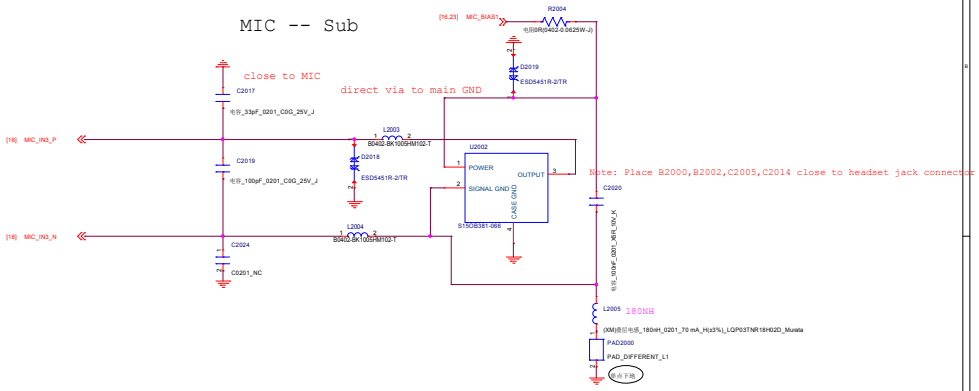

Note: Place B2000,B2002,C2005,C2014 close to headset jack connector

E-compass

厂家	I2C ADDRESS
AKD9918C	0Ch---0001100

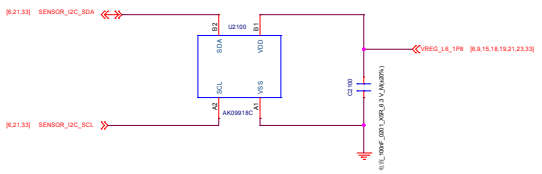

A sensor

厂家	I2C ADDRESS	
	SDO(GND)	SDO(high)
LIS2HH12	0x1E---0011110b	0x1F---0011111b
BMA420	0x18---00011000	0x19---00011001

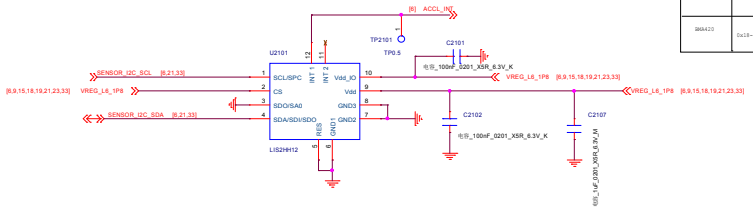

ALS PS LTR2568

厂家	I2C ADDRESS
LTR-2568ALS-WA	0x23---0100011

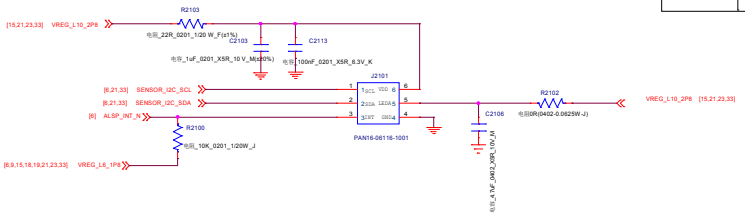

Finger Print

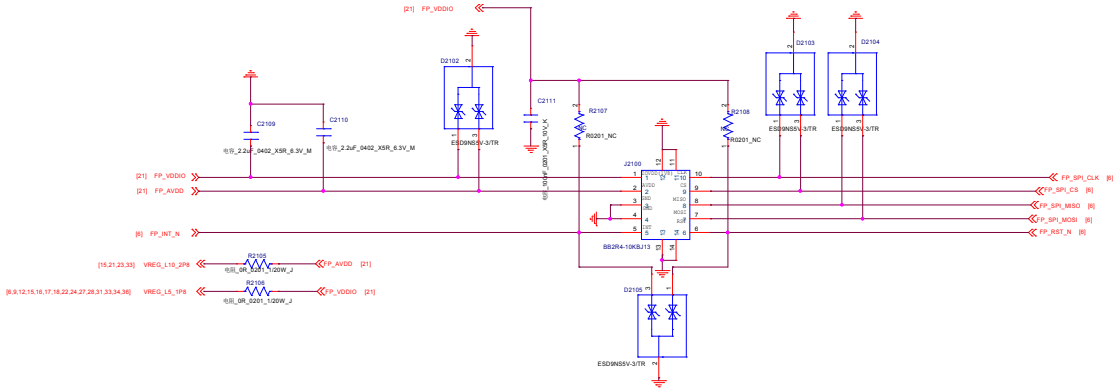

IR

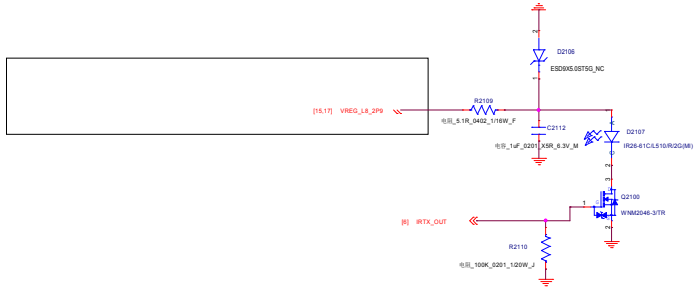

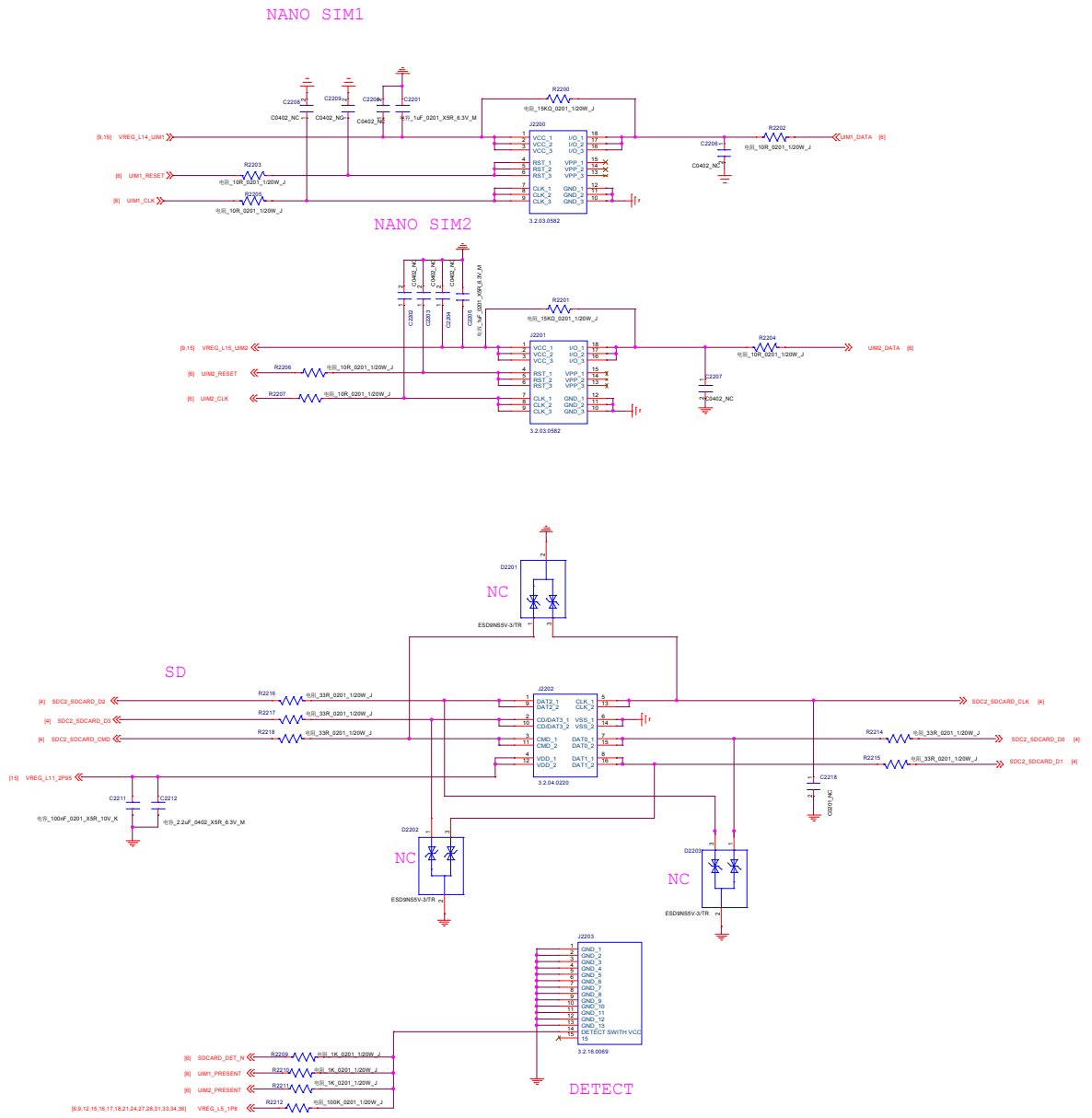
NANO SIM1
NANO SIM2
SD
NC
DETECT
J2200
J2201
J2202
J2203
R2200
R2201
R2202
R2203
R2204
R2205
R2206
R2207
R2208
R2209
R2210
R2211
R2212
R2214
R2215
R2216
R2217
R2218
C2201
C2206
C2207
C2208
C2209
C2211
C2212
C2218
D2201
D2202
D2203
[9,15] VREG_L14_UIM1
[8] UIM1_RESET
[8] UIM1_CLK
UIM1_DATA [8]
[9,15] VREG_L15_UIM2
[8] UIM2_RESET
[8] UIM2_CLK
UIM2_DATA [8]
[4] SDC2_SDCARD_D2
[4] SDC2_SDCARD_D3
[4] SDC2_SDCARD_CMD
[15] VREG_L11_2P95
SDC2_SDCARD_CLK [4]
SDC2_SDCARD_D0 [4]
SDC2_SDCARD_D1 [4]
[8] SDCARD_DET_N
[8] UIM1_PRESENT
[8] UIM2_PRESENT
[6,9,12,15,16,17,18,21,24,27,28,31,33,34,38] VREG_L5_1P8
电阻_15KΩ_0201_1/20W_J
电阻_10R_0201_1/20W_J
电阻_33R_0201_1/20W_J
电阻_1K_0201_1/20W_J
电阻_100K_0201_1/20W_J
电容_1uF_0201_X5R_6.3V_M
电容_100nF_0201_X5R_10V_K
电容_2.2uF_0402_X5R_6.3V_M
C0402_NC
ESD9N5V-3/TR
3.2.03.0582
3.2.04.0220
3.2.16.0069
DETECT SWITH VCC
15

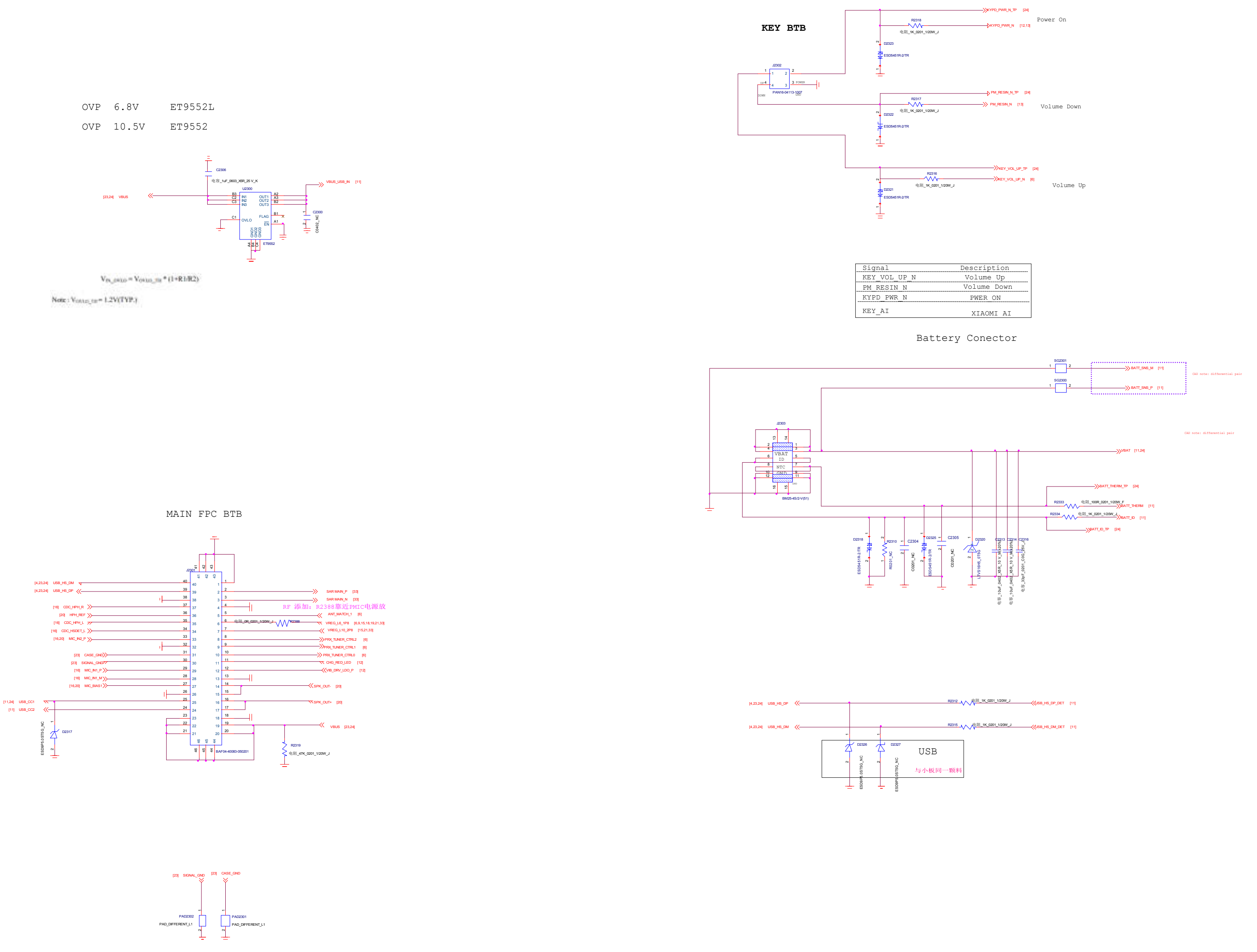

Signal	Description
KEY_VOL_UP_N	Volume Up
PM_RESIN_N	Volume Down
KYPD_PWR_N	PWER_ON
KEY_AI	XIAOMI AI

VBAT TEST POINT

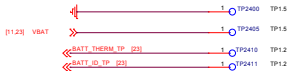

USB TEST POINT

KEY TEST point

UART TEST point

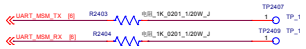

Force USB boot

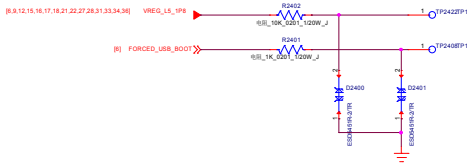

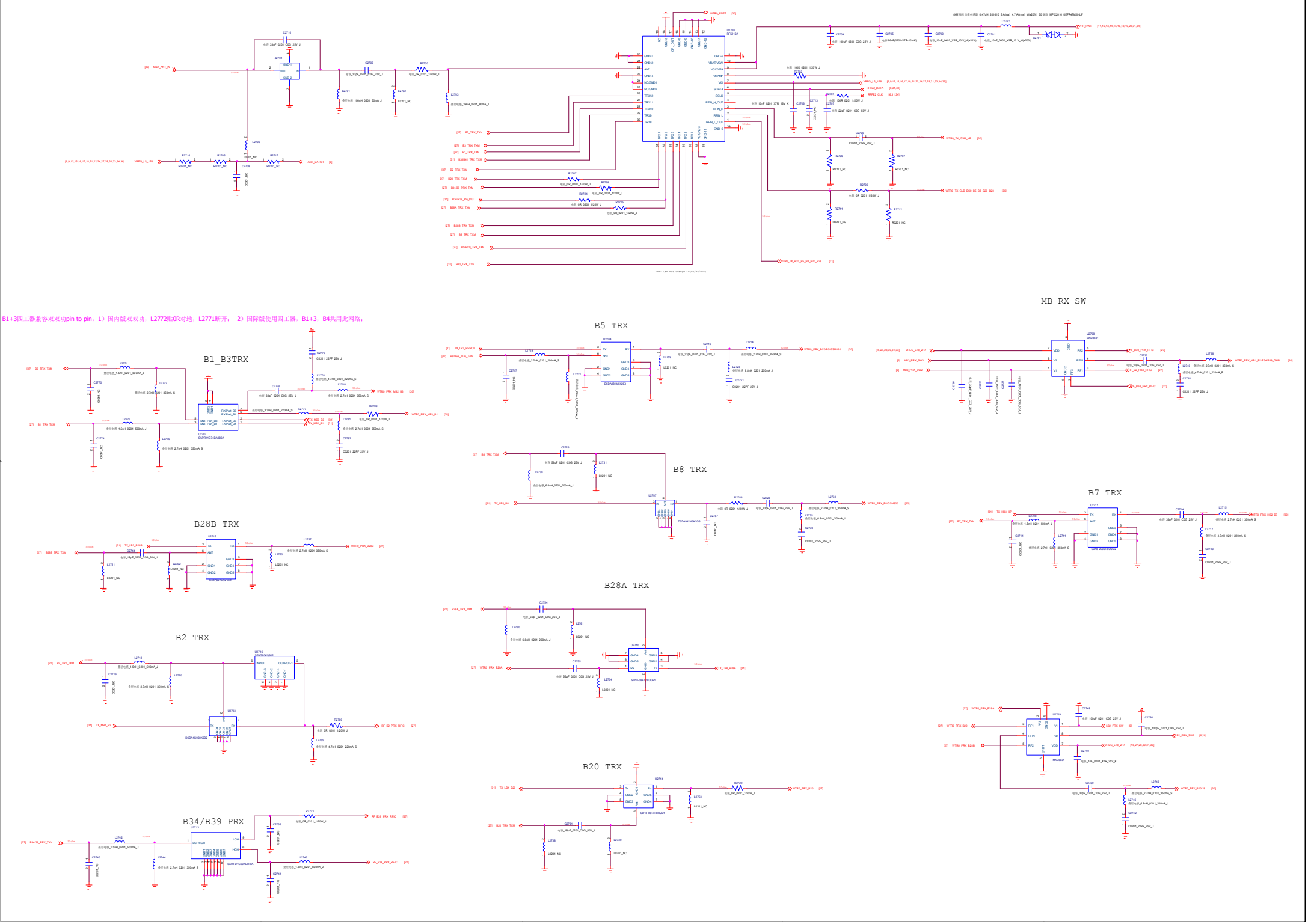
B1+3四工器兼容双双功pin to pin，1）国内版双双功，L2772贴0R对地，L2771断开； 2）国际版使用四工器，B1+3，B4共用此网络；
B1_B3TRX
B5 TRX
MB RX SW
B8 TRX
B7 TRX
B28B TRX
B28A TRX
B2 TRX
B20 TRX
B34/B39 PRX
5
4
3
2

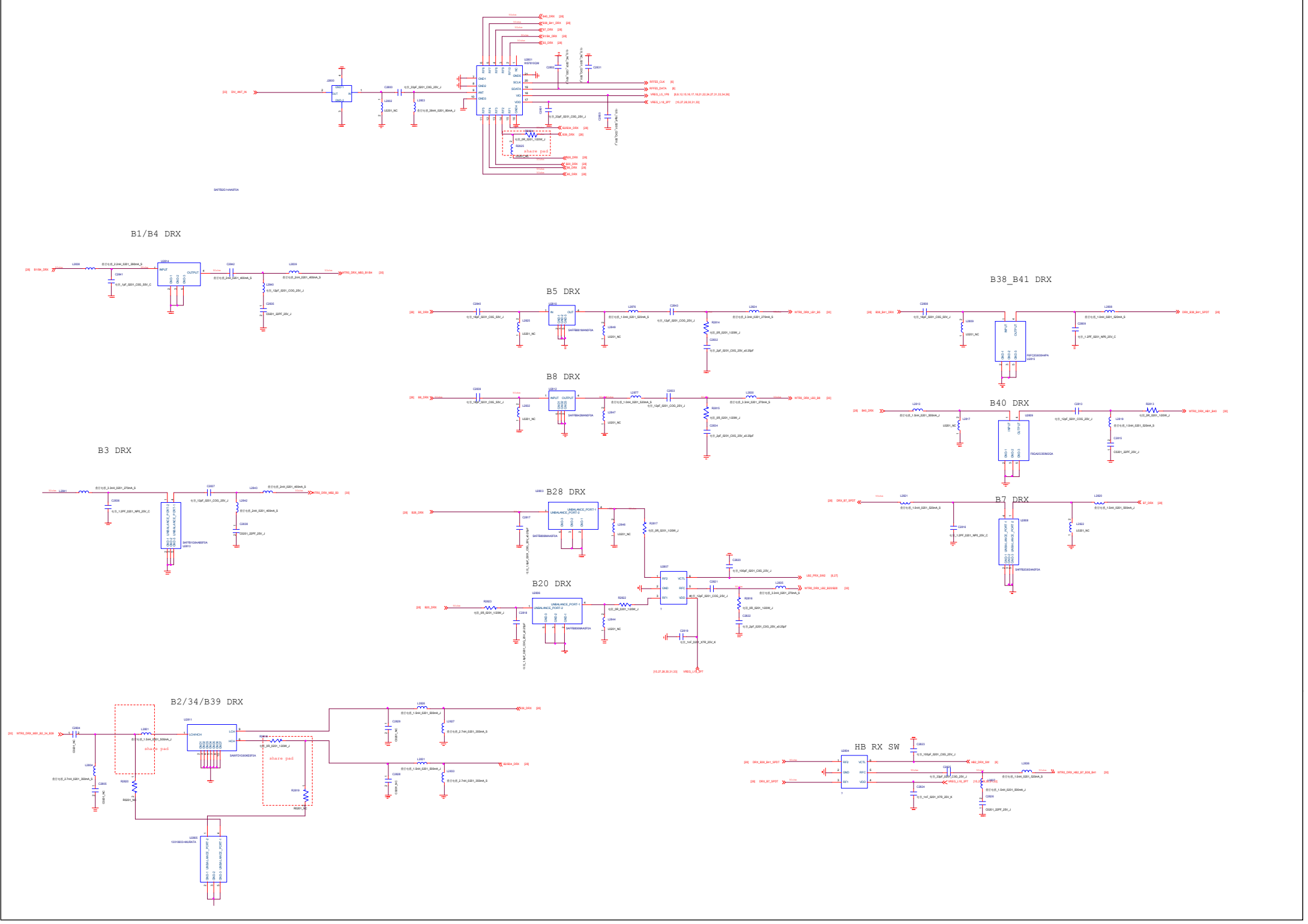
B1/B4 DRX
B5 DRX
B38_B41 DRX
B8 DRX
B40 DRX
B3 DRX
B28 DRX
B7 DRX
B20 DRX
B2/34/B39 DRX
HB RX SW

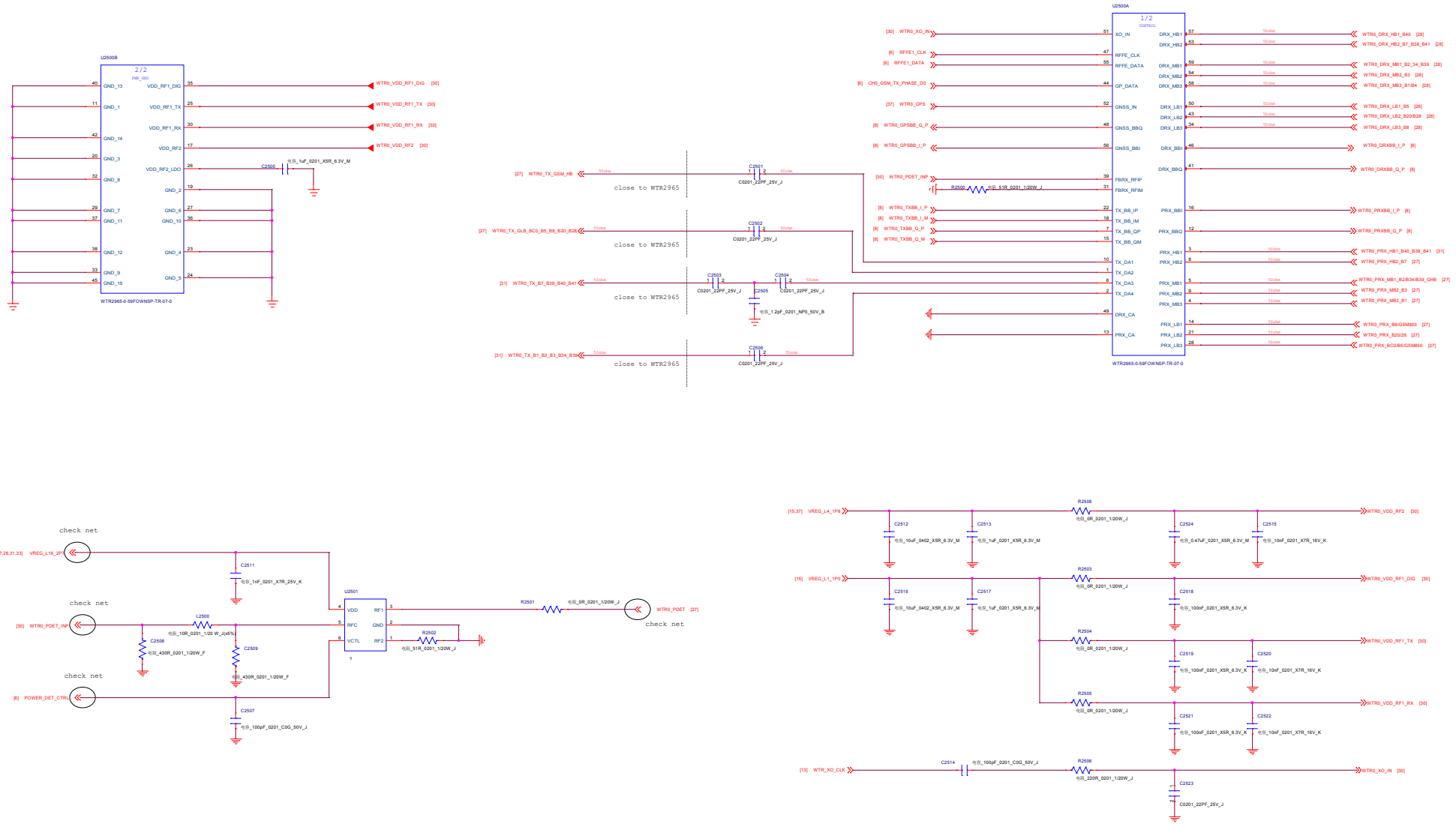
U2500B
2/2
PWR_GND
GND_13
GND_1
GND_14
GND_3
GND_8
GND_7
GND_11
GND_12
GND_9
GND_15
VDD_RF1_DIG
VDD_RF1_TX
VDD_RF1_RX
VDD_RF2
VDD_RF2_LDO
GND_2
GND_6
GND_10
GND_4
GND_5
WTR0_VDD_RF1_DIG [30]
WTR0_VDD_RF1_TX [30]
WTR0_VDD_RF1_RX [30]
WTR0_VDD_RF2 [30]
C2500
电容_1uF_0201_X5R_6.3V_M
WTR2965-0-59FOWNSP-TR-07-0
[27] WTR0_TX_GSM_HB
C2501
C0201_22PF_25V_J
close to WTR2965
[27] WTR0_TX_GLB_BC0_B5_B8_B20_B28
C2502
C0201_22PF_25V_J
close to WTR2965
[31] WTR0_TX_B7_B38_B40_B41
C2503
C0201_22PF_25V_J
C2505
电容_1.2pF_0201_NP0_50V_B
C2504
C0201_22PF_25V_J
close to WTR2965
[31] WTR0_TX_B1_B2_B3_B34_B39
C2506
C0201_22PF_25V_J
close to WTR2965
U2500A
1/2
CONTROL
[30] WTR0_XO_IN
[8] RFFE1_CLK
[8] RFFE1_DATA
[8] CH0_GSM_TX_PHASE_D0
[37] WTR0_GPS
[8] WTR0_GPSBB_Q_P
[8] WTR0_GPSBB_I_P
[30] WTR0_PDET_INP
R2500
电容_51R_0201_1/20W_J
[8] WTR0_TXBB_I_P
[8] WTR0_TXBB_I_M
[8] WTR0_TXBB_Q_P
[8] WTR0_TXBB_Q_M
XO_IN
RFFE_CLK
RFFE_DATA
GP_DATA
GNSS_IN
GNSS_BBQ
GNSS_BBI
FBRX_RFIP
FBRX_RFIM
TX_BB_IP
TX_BB_IM
TX_BB_QP
TX_BB_QM
TX_DA1
TX_DA2
TX_DA3
TX_DA4
DRX_CA
PRX_CA
DRX_HB1
DRX_HB2
DRX_MB1
DRX_MB2
DRX_MB3
DRX_LB1
DRX_LB2
DRX_LB3
DRX_BBI
DRX_BBQ
PRX_BBI
PRX_BBQ
PRX_HB1
PRX_HB2
PRX_MB1
PRX_MB2
PRX_MB3
PRX_LB1
PRX_LB2
PRX_LB3
WTR0_DRX_HB1_B40 [28]
WTR0_DRX_HB2_B7_B38_B41 [28]
WTR0_DRX_MB1_B2_34_B39 [28]
WTR0_DRX_MB2_B3 [28]
WTR0_DRX_MB3_B1/B4 [28]
WTR0_DRX_LB1_B5 [28]
WTR0_DRX_LB2_B20/B28 [28]
WTR0_DRX_LB3_B8 [28]
WTR0_DRXBB_I_P [8]
WTR0_DRXBB_Q_P [8]
WTR0_PRXBB_I_P [8]
WTR0_PRXBB_Q_P [8]
WTR0_PRX_HB1_B40_B38_B41 [31]
WTR0_PRX_HB2_B7 [27]
WTR0_PRX_MB1_B2/B34/B39_GHB [27]
WTR0_PRX_MB2_B3 [27]
WTR0_PRX_MB3_B1 [27]
WTR0_PRX_B8/GSM900 [27]
WTR0_PRX_B20/28 [27]
WTR0_PRX_BC0/B5/GSM850 [27]
WTR2965-0-59FOWNSP-TR-07-0
check net
[15,27,28,31,33] VREG_L18_2P0
C2511
电容_1nF_0201_X7R_25V_K
check net
[30] WTR0_PDET_INP
L2500
电感_10R_0201_1/20 W_J(±5%)
C2508
电容_430R_0201_1/20W_F
C2509
电容_430R_0201_1/20W_F
check net
[8] POWER_DET_CTRL
C2507
电容_100pF_0201_C0G_50V_J
U2501
VDD
RF1
RFC
GND
VCTL
RF2
?
R2502
电阻_51R_0201_1/20W_J
R2501
电阻_0R_0201_1/20W_J
WTR0_PDET [27]
check net
[15,37] VREG_L4_1P8
C2512
电容_10uF_0402_X5R_6.3V_M
C2513
电容_1uF_0201_X5R_6.3V_M
R2508
电阻_0R_0201_1/20W_J
C2524
电容_0.47uF_0201_X5R_6.3V_M
C2515
电容_10nF_0201_X7R_16V_K
WTR0_VDD_RF2 [30]
[15] VREG_L1_1P0
C2516
电容_10uF_0402_X5R_6.3V_M
C2517
电容_1uF_0201_X5R_6.3V_M
R2503
电阻_0R_0201_1/20W_J
C2518
电容_100nF_0201_X5R_6.3V_K
WTR0_VDD_RF1_DIG [30]
R2504
电阻_0R_0201_1/20W_J
C2519
电容_100nF_0201_X5R_6.3V_K
C2520
电容_10nF_0201_X7R_16V_K
WTR0_VDD_RF1_TX [30]
R2505
电阻_0R_0201_1/20W_J
C2521
电容_100nF_0201_X5R_6.3V_K
C2522
电容_10nF_0201_X7R_16V_K
WTR0_VDD_RF1_RX [30]
[13] WTR_XO_CLK
C2514
电容_100pF_0201_C0G_50V_J
R2506
电阻_220R_0201_1/20W_J
C2523
C0201_22PF_25V_J
WTR0_XO_IN [30]

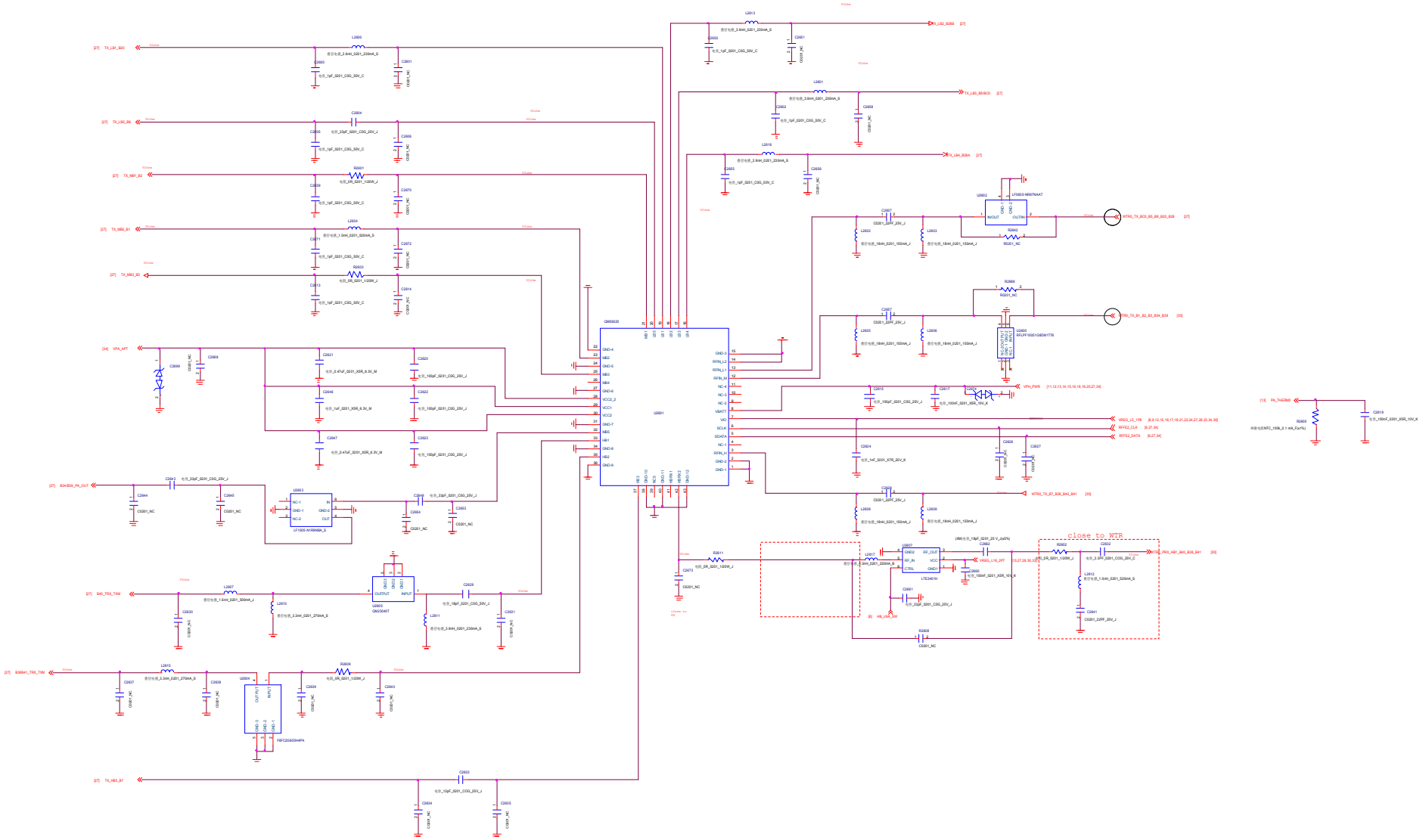
close to WTR

DPDT SWITCH

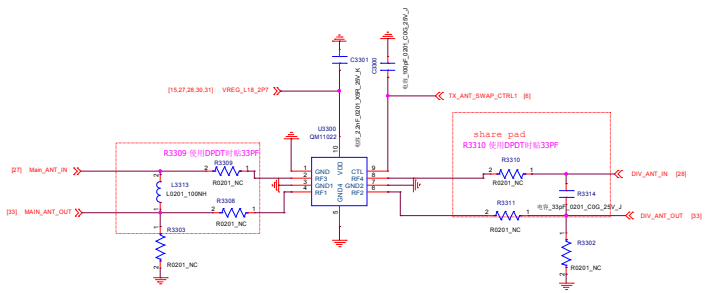

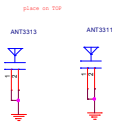

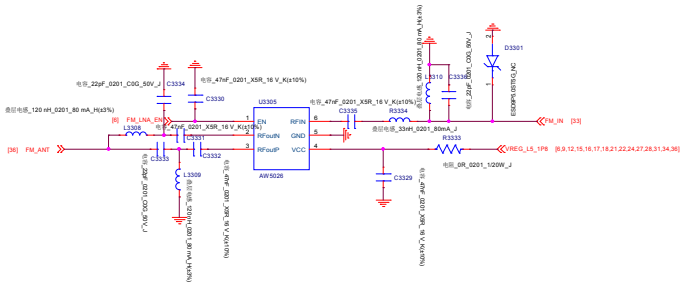

SAR Sensor

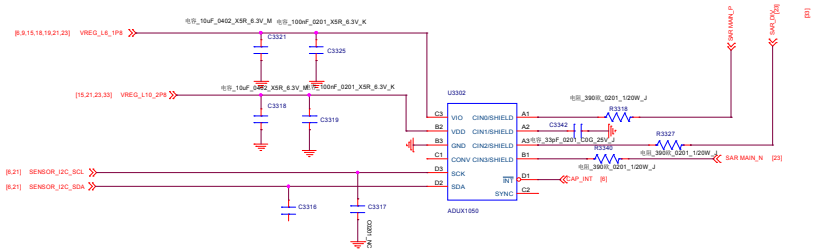

DIV ANT

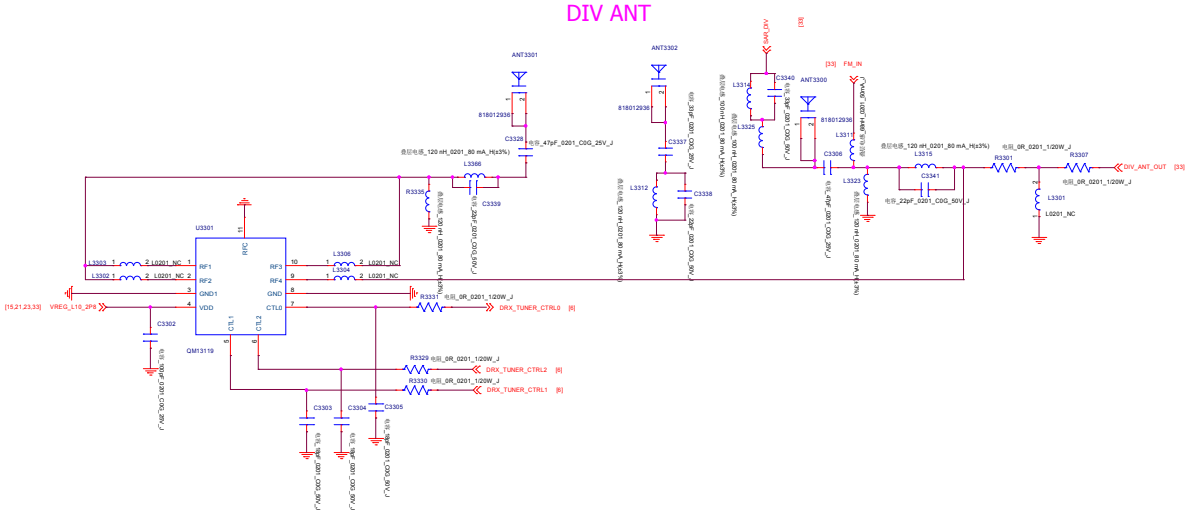

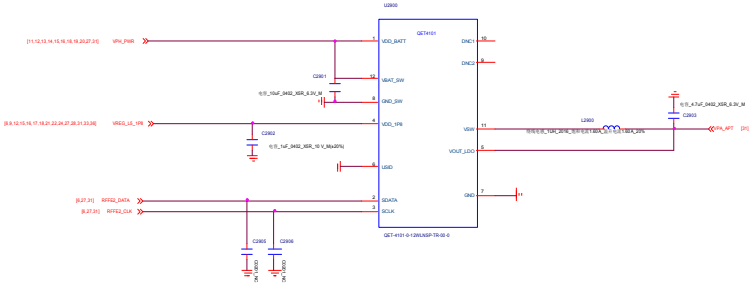
U2900
QET4101
VDD_BATT
VBAT_SW
GND_SW
VDD_1P8
LSID
SDATA
SCLK
DNC1
DNC2
VSW
VOUT_LDO
GND
QET-4101-0-1200,NSP-TR-00-0
VPH_PWR
VREG_LS_1P8
RFFE2_DATA
RFFE2_CLK
C2901
C2902
C2905
C2906
L2900
C2903
VPA_APT
[31]

Main ANT
J3300
GND-3
GND-1
GND-2
IN
MAIN_ANT_OUT
[33]

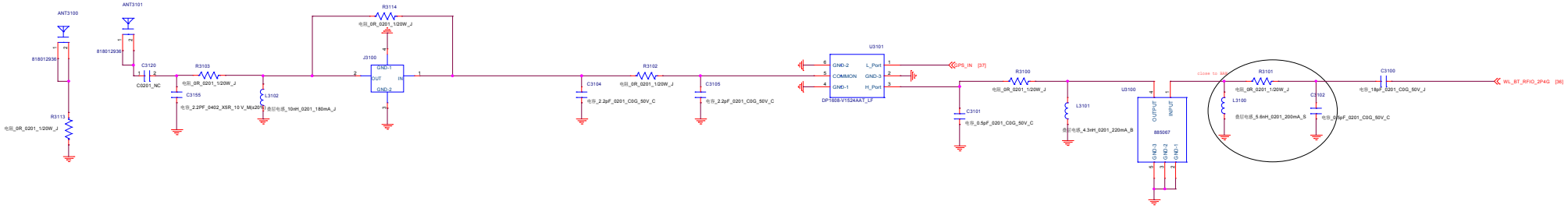
ANT3100
818012936
R3113
电阻_0R_0201_1/20W_J
ANT3101
818012936
C3120
C0201_NC
R3103
电阻_0R_0201_1/20W_J
C3155
电容_2.2PF_0402_X5R_10 V_Mis2016
L3102
叠层电感_10nH_0201_180mA_J
R3114
电阻_0R_0201_1/20W_J
J3100
GND-1
OUT
IN
GND-2
C3104
电容_2.2pF_0201_C0G_50V_C
R3102
电阻_0R_0201_1/20W_J
C3105
电容_2.2pF_0201_C0G_50V_C
U3101
GND-2
COMMON
GND-1
L_Port
GND-3
H_Port
DP1B08-V1S24AAT_LF
GPS_IN [37]
C3101
电容_0.5pF_0201_C0G_50V_C
R3100
电阻_0R_0201_1/20W_J
L3101
叠层电感_4.3nH_0201_220mA_B
U3100
OUTPUT
INPUT
885067
GND-3
GND-2
GND-1
close to IC
R3101
电阻_0R_0201_1/20W_J
L3100
叠层电感_5.6nH_0201_200mA_S
C3102
电容_0.5pF_0201_C0G_50V_C
C3100
电容_18pF_0201_C0G_50V_J
WL_BT_RFIO_2P4G [36]

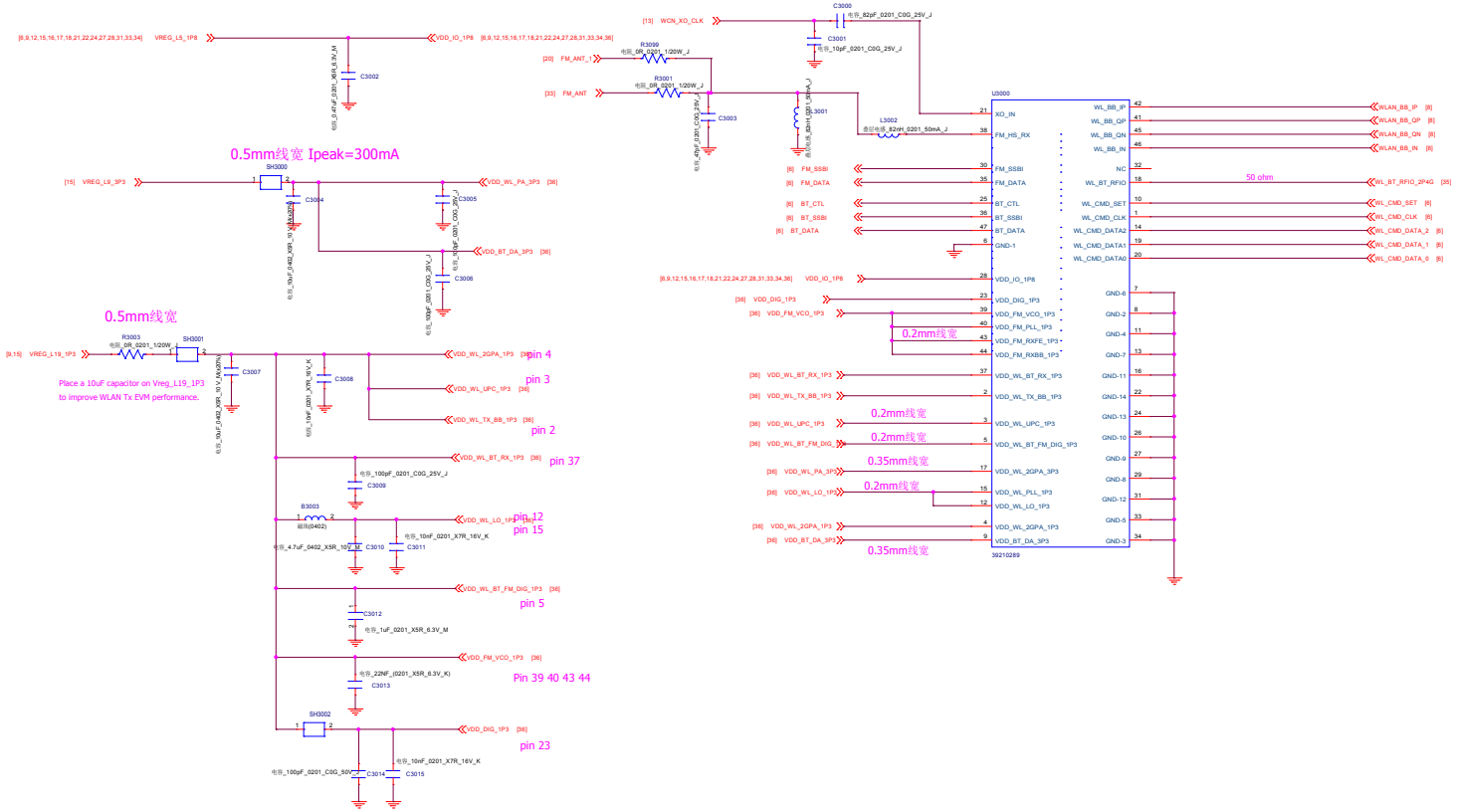
[8,9,12,15,16,17,18,21,22,24,27,28,31,33,34] VREG_L5_1P8
VDD_IO_1P8 [8,9,12,15,16,17,18,21,22,24,27,28,31,33,34,36]
C3002
[13] WCN_XO_CLK
C3000
电容_82pF_0201_C0G_25V_J
C3001
电容_10pF_0201_C0G_25V_J
R3099
电阻_0R_0201_1/20W_J
[20] FM_ANT_1
R3001
电阻_0R_0201_1/20W_J
[33] FM_ANT
C3003
L3001
L3002
电感_82nH_0201_50mA_J
U3000
XO_IN
FM_HS_RX
FM_SSBI
FM_DATA
BT_CTL
BT_SSBI
BT_DATA
GND-1
VDD_IO_1P8
VDD_DIG_1P3
VDD_FM_VCO_1P3
VDD_FM_PLL_1P3
VDD_FM_RXFE_1P3
VDD_FM_RXBB_1P3
VDD_WL_BT_RX_1P3
VDD_WL_TX_BB_1P3
VDD_WL_UPC_1P3
VDD_WL_BT_FM_DIG_1P3
VDD_WL_2GPA_3P3
VDD_WL_PLL_1P3
VDD_WL_LO_1P3
VDD_WL_2GPA_1P3
VDD_BT_DA_3P3
39210289
WL_BB_IP
WL_BB_QP
WL_BB_QN
WL_BB_IN
NC
WL_BT_RFIO
WL_CMD_SET
WL_CMD_CLK
WL_CMD_DATA2
WL_CMD_DATA1
WL_CMD_DATA0
GND-6
GND-2
GND-4
GND-7
GND-11
GND-14
GND-13
GND-10
GND-9
GND-8
GND-12
GND-5
GND-3
WLAN_BB_IP [8]
WLAN_BB_QP [8]
WLAN_BB_QN [8]
WLAN_BB_IN [8]
50 ohm
WL_BT_RFIO_2P4G [35]
WL_CMD_SET [8]
WL_CMD_CLK [8]
WL_CMD_DATA_2 [8]
WL_CMD_DATA_1 [8]
WL_CMD_DATA_0 [8]
0.5mm线宽 Ipeak=300mA
SH3000
[15] VREG_L9_3P3
C3004
C3005
VDD_WL_PA_3P3 [36]
VDD_BT_DA_3P3 [36]
C3006
0.5mm线宽
R3003
电阻_0R_0201_1/20W_J
SH3001
[9,15] VREG_L19_1P3
C3007
Place a 10uF capacitor on Vreg_L19_1P3
to improve WLAN Tx EVM performance.
C3008
VDD_WL_2GPA_1P3 [36]
pin 4
VDD_WL_UPC_1P3 [36]
pin 3
VDD_WL_TX_BB_1P3 [36]
pin 2
VDD_WL_BT_RX_1P3 [36]
pin 37
C3009
B3003
磁珠(0402)
VDD_WL_LO_1P3 [36]
pin 12
pin 15
C3010
C3011
VDD_WL_BT_FM_DIG_1P3 [36]
pin 5
C3012
VDD_FM_VCO_1P3 [36]
C3013
Pin 39 40 43 44
SH3002
VDD_DIG_1P3 [36]
pin 23
C3014
C3015
[36] VDD_WL_BT_RX_1P3
[36] VDD_WL_TX_BB_1P3
[36] VDD_WL_UPC_1P3
[36] VDD_WL_BT_FM_DIG_1P3
[36] VDD_WL_PA_3P3
[36] VDD_WL_LO_1P3
[36] VDD_WL_2GPA_1P3
[36] VDD_BT_DA_3P3
[8] FM_SSBI
[8] FM_DATA
[8] BT_CTL
[8] BT_SSBI
[8] BT_DATA
[8,9,12,15,16,17,18,21,22,24,27,28,31,33,34,36] VDD_IO_1P8
[36] VDD_DIG_1P3
[36] VDD_FM_VCO_1P3
0.2mm线宽
0.2mm线宽
0.2mm线宽
0.35mm线宽
0.2mm线宽
0.35mm线宽

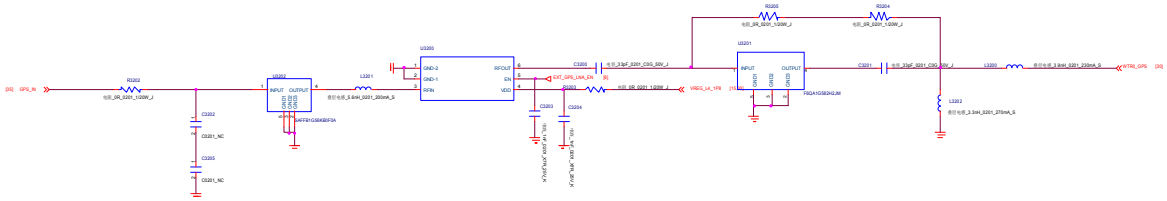

[35] GPS_IN
R3203
电阻_SR_0201_100W_J
C3202
C3201_NC
C3205
C3201_NC
U3202
INPUT
OUTPUT
GND1
GND2
GND3
SAFFB1G56B3E0FA
L3201
电感电感_5.6nH_0201_200mA_S
U3200
GND-2
GND-1
RFIN
RFOUT
EN
VDD
C3203
C3204
C3206
电阻_3.3pF_0201_C0G_50V_J
EXT_GPS_LNA_EN
R3203
电阻_SR_0201_100W_J
VREG_L4_1P8
U3201
INPUT
OUTPUT
GND1
GND2
GND3
FBGA1G5B2H2JM
R3205
电阻_SR_0201_100W_J
R3204
电阻_SR_0201_100W_J
C3201
电阻_3.3pF_0201_C0G_50V_J
L3200
电感电感_3.3nH_0201_220mA_S
L3202
电感电感_3.3nH_0201_270mA_S
WTR0_GPS
[35]